website:http://biz.LGservice.com
e-mail:http://www.LGEservice.com/techsup.html

LCD TV
SERVICE MANUAL

CHASSIS : ML-041A

MODEL:RM-27LZ50C

CAUTION
BEFORE SERVICING THE CHASSIS,
READ THE SAFETY PRECAUTIONS IN THIS MANUAL.

CONTENTS

CONTENTS 2

PRODUCT SAFETY 3

SPECIFICATION 6

TIMING CHART 9

ADJUSTMENT INSTRUCTION 10

TROUBLE SHOOTING 14

BLOCK DIAGRAM.....19

WIRING DIAGRAM 21

EXPLODED VIEW 22

EXPLODED VIEW PARTS LIST 23

REPLACEMENT PARTS LIST 24

SVC. SHEET .....

SAFETY PRECAUTIONS

IMPORTANT SAFETY NOTICE

Many electrical and mechanical parts in this chassis have special safety-related characteristics. These parts are identified by ⚠ in the Schematic Diagram and Replacement Parts List.
It is essential that these special safety parts should be replaced with the same components as recommended in this manual to prevent X-RADIATION, Shock, Fire, or other Hazards.
Do not modify the original design without permission of manufacturer.

General Guidance

An **isolation Transformer should always be used** during the servicing of a receiver whose chassis is not isolated from the AC power line. Use a transformer of adequate power rating as this protects the technician from accidents resulting in personal injury from electrical shocks.

It will also protect the receiver and it's components from being damaged by accidental shorts of the circuitry that may be inadvertently introduced during the service operation.

If any fuse (or Fusible Resistor) in this TV receiver is blown, replace it with the specified.

When replacing a high wattage resistor (Oxide Metal Film Resistor, over 1W), keep the resistor 10mm away from PCB.

Keep wires away from high voltage or high temperature parts.

X-RAY Radiation

Warning:

The source of X-RAY RADIATION in this TV receiver is the High Voltage Section and the LCD PANEL.
For continued X-RAY RADIATION protection, the replacement panel must be the same type panel as specified in the Replacement Parts List.

To determine the presence of high voltage, use an accurate high impedance HV meter.

Adjust brightness, color, contrast controls to minimum.
Measure the high voltage.
The meter reading should indicate
23.5 ¡ 1.5KV: 14-19 inch, 26 ¡ 1.5KV: 19-21 inch,
29.0 ¡ 1.5KV: 25-29 inch, 30.0 ¡ 1.5KV: 32 inch
If the meter indication is out of tolerance, immediate service and correction is required to prevent the possibility of premature component failure.

Before returning the receiver to the customer,

always perform an **AC leakage current check** on the exposed metallic parts of the cabinet, such as antennas, terminals, etc., to be sure the set is safe to operate without damage of electrical shock.

Leakage Current Cold Check(Antenna Cold Check)
With the instrument AC plug removed from AC source, connect an electrical jumper across the two AC plug prongs. Place the AC switch in the on position, connect one lead of ohm-meter to the AC plug prongs tied together and touch other ohm-meter lead in turn to each exposed metallic parts such as antenna terminals, phone jacks, etc.
If the exposed metallic part has a return path to the chassis, the measured resistance should be between 1MΩ and 5.2MΩ.
When the exposed metal has no return path to the chassis the reading must be infinite.
An other abnormality exists that must be corrected before the receiver is returned to the customer.

Leakage Current Hot Check (See below Figure)
Plug the AC cord directly into the AC outlet.
Do not use a line Isolation Transformer during this check.
Connect 1.5K/10watt resistor in parallel with a 0.15uF capacitor between a known good earth ground (Water Pipe, Conduit, etc.) and the exposed metallic parts.
Measure the AC voltage across the resistor using AC voltmeter with 1000 ohms/volt or more sensitivity.
Reverse plug the AC cord into the AC outlet and repeat AC voltage measurements for each exposed metallic part. Any voltage measured must not exceed 0.75 volt RMS which is corresponds to 0.5mA.
In case any measurement is out of the limits specified, there is possibility of shock hazard and the set must be checked and repaired before it is returned to the customer.

Leakage Current Hot Check circuit

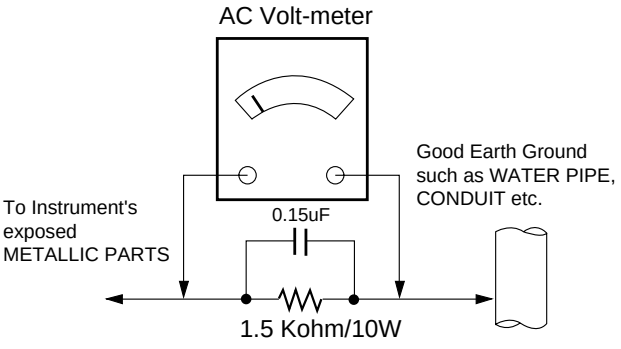

SERVICING PRECAUTIONS

CAUTION: Before servicing receivers covered by this service manual and its supplements and addenda, read and follow the *SAFETY PRECAUTIONS* on page 3 of this publication.
NOTE: If unforeseen circumstances create conflict between the following servicing precautions and any of the safety precautions on page 3 of this publication, always follow the safety precautions. Remember: Safety First.

General Servicing Precautions

1. Always unplug the receiver AC power cord from the AC power source before;
   a. Removing or reinstalling any component, circuit board module or any other receiver assembly.
   b. Disconnecting or reconnecting any receiver electrical plug or other electrical connection.
   c. Connecting a test substitute in parallel with an electrolytic capacitor in the receiver.
   CAUTION: A wrong part substitution or incorrect polarity installation of electrolytic capacitors may result in an explosion hazard.

2. Test high voltage only by measuring it with an appropriate high voltage meter or other voltage measuring device (DVM, FETVOM, etc) equipped with a suitable high voltage probe.
   Do not test high voltage by "drawing an arc".
3. Do not spray chemicals on or near this receiver or any of its assemblies.
4. Unless specified otherwise in this service manual, clean electrical contacts only by applying the following mixture to the contacts with a pipe cleaner, cotton-tipped stick or comparable non-abrasive applicator; 10% (by volume) Acetone and 90% (by volume) isopropyl alcohol (90%-99% strength)
   CAUTION: This is a flammable mixture.
   Unless specified otherwise in this service manual, lubrication of contacts in not required.
5. Do not defeat any plug/socket B+ voltage interlocks with which receivers covered by this service manual might be equipped.
6. Do not apply AC power to this instrument and/or any of its electrical assemblies unless all solid-state device heat sinks are correctly installed.
7. Always connect the test receiver ground lead to the receiver chassis ground before connecting the test receiver positive lead.
   Always remove the test receiver ground lead last.
8. *Use with this receiver only the test fixtures specified in this service manual.*
   CAUTION: Do not connect the test fixture ground strap to any heat sink in this receiver.

Electrostatically Sensitive (ES) Devices

Some semiconductor (solid-state) devices can be damaged easily by static electricity. Such components commonly are called *Electrostatically Sensitive (ES) Devices.* Examples of typical ES devices are integrated circuits and some field-effect transistors and semiconductor "chip" components. The following techniques should be used to help reduce the incidence of component damage caused by static by static electricity.

1. Immediately before handling any semiconductor component or semiconductor-equipped assembly, drain off any electrostatic charge on your body by touching a known earth ground. Alternatively, obtain and wear a commercially available discharging wrist strap device, which should be removed to prevent potential shock reasons prior to applying power to the unit under test.
2. After removing an electrical assembly equipped with ES devices, place the assembly on a conductive surface such as aluminum foil, to prevent electrostatic charge buildup or exposure of the assembly.
3. Use only a grounded-tip soldering iron to solder or unsolder ES devices.
4. Use only an anti-static type solder removal device. Some solder removal devices not classified as "anti-static" can generate electrical charges sufficient to damage ES devices.
5. Do not use freon-propelled chemicals. These can generate electrical charges sufficient to damage ES devices.
6. Do not remove a replacement ES device from its protective package until immediately before you are ready to install it. (Most replacement ES devices are packaged with leads electrically shorted together by conductive foam, aluminum foil or comparable conductive material).
7. Immediately before removing the protective material from the leads of a replacement ES device, touch the protective material to the chassis or circuit assembly into which the device will be installed.
   CAUTION: Be sure no power is applied to the chassis or circuit, and observe all other safety precautions.
8. Minimize bodily motions when handling unpackaged replacement ES devices. (Otherwise harmless motion such as the brushing together of your clothes fabric or the lifting of your foot from a carpeted floor can generate static electricity sufficient to damage an ES device.)

General Soldering Guidelines

1. Use a grounded-tip, low-wattage soldering iron and appropriate tip size and shape that will maintain tip temperature within the range or 500¡ÆF to 600¡ÆF.
2. Use an appropriate gauge of RMA resin-core solder composed of 60 parts tin/40 parts lead.
3. Keep the soldering iron tip clean and well tinned.
4. Thoroughly clean the surfaces to be soldered. Use a mall wire-bristle (0.5 inch, or 1.25cm) brush with a metal handle.
   Do not use freon-propelled spray-on cleaners.
5. Use the following unsoldering technique
   a. Allow the soldering iron tip to reach normal temperature. (500¡ÆF to 600¡ÆF)
   b. Heat the component lead until the solder melts.
   c. Quickly draw the melted solder with an anti-static, suction-type solder removal device or with solder braid.
   CAUTION: Work quickly to avoid overheating the circuitboard printed foil.
6. Use the following soldering technique.
   a. Allow the soldering iron tip to reach a normal temperature (500¡ÆF to 600¡ÆF)
   b. First, hold the soldering iron tip and solder the strand against the component lead until the solder melts.
   c. Quickly move the soldering iron tip to the junction of the component lead and the printed circuit foil, and hold it there only until the solder flows onto and around both the component lead and the foil.
   CAUTION: Work quickly to avoid overheating the circuit board printed foil.
   d. Closely inspect the solder area and remove any excess or splashed solder with a small wire-bristle brush.

IC Remove/Replacement

Some chassis circuit boards have slotted holes (oblong) through which the IC leads are inserted and then bent flat against the circuit foil. When holes are the slotted type, the following technique should be used to remove and replace the IC. When working with boards using the familiar round hole, use the standard technique as outlined in paragraphs 5 and 6 above.

Removal

1. Desolder and straighten each IC lead in one operation by gently prying up on the lead with the soldering iron tip as the solder melts.
2. Draw away the melted solder with an anti-static suction-type solder removal device (or with solder braid) before removing the IC.

Replacement

1. Carefully insert the replacement IC in the circuit board.
2. Carefully bend each IC lead against the circuit foil pad and solder it.
3. Clean the soldered areas with a small wire-bristle brush. (It is not necessary to reapply acrylic coating to the areas).

"Small-Signal" Discrete Transistor Removal/Replacement

1. Remove the defective transistor by clipping its leads as close as possible to the component body.
2. Bend into a "U" shape the end of each of three leads remaining on the circuit board.
3. Bend into a "U" shape the replacement transistor leads.
4. Connect the replacement transistor leads to the corresponding leads extending from the circuit board and crimp the "U" with long nose pliers to insure metal to metal contact then solder each connection.

Power Output, Transistor Device Removal/Replacement

1. Heat and remove all solder from around the transistor leads.
2. Remove the heat sink mounting screw (if so equipped).
3. Carefully remove the transistor from the heat sink of the circuit board.
4. Insert new transistor in the circuit board.
5. Solder each transistor lead, and clip off excess lead.
6. Replace heat sink.

Diode Removal/Replacement

1. Remove defective diode by clipping its leads as close as possible to diode body.
2. Bend the two remaining leads perpendicular y to the circuit board.
3. Observing diode polarity, wrap each lead of the new diode around the corresponding lead on the circuit board.
4. Securely crimp each connection and solder it.
5. Inspect (on the circuit board copper side) the solder joints of the two "original" leads. If they are not shiny, reheat them and if necessary, apply additional solder.

Fuse and Conventional Resistor Removal/Replacement

1. Clip each fuse or resistor lead at top of the circuit board hollow stake.
2. Securely crimp the leads of replacement component around notch at stake top.
3. Solder the connections.
   CAUTION: Maintain original spacing between the replaced component and adjacent components and the circuit board to prevent excessive component temperatures.

Circuit Board Foil Repair

Excessive heat applied to the copper foil of any printed circuit board will weaken the adhesive that bonds the foil to the circuit board causing the foil to separate from or "lift-off" the board. The following guidelines and procedures should be followed whenever this condition is encountered.

At IC Connections

To repair a defective copper pattern at IC connections use the following procedure to install a jumper wire on the copper pattern side of the circuit board. (Use this technique only on IC connections).

1. Carefully remove the damaged copper pattern with a sharp knife. (Remove only as much copper as absolutely necessary).
2. carefully scratch away the solder resist and acrylic coating (if used) from the end of the remaining copper pattern.
3. Bend a small "U" in one end of a small gauge jumper wire and carefully crimp it around the IC pin. Solder the IC connection.
4. Route the jumper wire along the path of the out-away copper pattern and let it overlap the previously scraped end of the good copper pattern. Solder the overlapped area and clip off any excess jumper wire.

At Other Connections

Use the following technique to repair the defective copper pattern at connections other than IC Pins. This technique involves the installation of a jumper wire on the component side of the circuit board.

1. Remove the defective copper pattern with a sharp knife. Remove at least 1/4 inch of copper, to ensure that a hazardous condition will not exist if the jumper wire opens.
2. Trace along the copper pattern from both sides of the pattern break and locate the nearest component that is directly connected to the affected copper pattern.
3. Connect insulated 20-gauge jumper wire from the lead of the nearest component on one side of the pattern break to the lead of the nearest component on the other side. Carefully crimp and solder the connections.
   CAUTION: Be sure the insulated jumper wire is dressed so the it does not touch components or sharp edges.

SPECIFICATION

NOTE : Specifications and others are subject to change without notice for improvement.

1. Application range

This specification is applied to ML-041A chassis.

2. Requirement for Test

Testing for standard of each part must be followed in below condition.

(1) Temperature: 25°C ± 2°C
(2) Power: Standard input voltage (AC 100-240V, 50/60Hz)
(3) Measurement must be performed after heat-run more than 30min.
(4) Adjusting standard for this chassis is followed a special standard.

4.General Specification(TV)

No.	Item	Specification	Remark
1	Video input applicable system	1)PAL-D/K,B/G,I 2)NTSC-M 3)SECAM NTSC 4.43'	
2	Receivable broadcasting system	1)PAL/SECAM BG 2)PAL/SECAM DK 3)PAL I/I 4)SECAM L/L' 5)NTSC M	EU/Non-EU(RZ/RT) (PAL Market)
		6)PAL-N/M 7)NTSC M	7)NTSC Area(RM)
3	RF input channel	VHF : E2 ~ E12 UHF : E21 ~ E69 CATV : S1 ~ S20 HYPER : S21 ~ S41	PAL
		L/L' : B,C,D	FRANCE
		VHF : 2 ~ 13 UHF : 14 ~ 69 CATV : 1 ~ 125	NTSC
		VHF Low : 1~M10 VHF High : 4~S22 UHF : S23~62	JAPAN
4	Input voltage	AC 100 - 240V/ 50Hz,60HZ	
5	Picture size	685.8 mm	27"
6	Tuning system	FVS 100 program FS	PAL, 200PR.(Option) NTSC
7	Operting environment	1)Temp : 0 ~ 40 deg 2)Humidity : 85%	
8	Storage environment	3)Temp : -20 ~ 60 deg 4)Humidity : 85%	
9	Display	LCD Module	CMO

5.General Specification(Monitor)

No.	Item	Specification			Unit	Remark
1	Panel	27" TFT WXGA LCD				
2	Frequency range	H:31 ~ 61KHz, V: 56 ~ 75Hz				DVI-I input
3	Control function	1) Contrast/ Brightness 2) H-Position/ V-Position 3) Tracking : Clock/Phase 4) Auto Configure 5) Reset				
4	Component Jack	1: Y 3: Pb 5: Pr 7: Line1 Ready 9: LINE2 11: LINE3 13: Line3 Ready				Middle east /NTSC Area
	D4 Jack (525i,525p,750p,1125i)	2: Y GND 4: Pb GND 6: Pr GND 8: LINE1 10: Line2 Ready 12: SWITCH GND 14: SWITCH				Japan only
5		H/V-Sync	Video	Power consumption		LED
	Power ON	ON/ON	Active	≤ Max 170	W	Green
	Stand by	OFF/ON	OFF	≤ 3.0	W	Red
	DPMS Mode	ON/OFF	OFF	≤typ.30	W	Green
	Power off	-	-	-	W	*.
6	LCD Module	Type Size	CMO		mm	(H) x (V) x (D)
		Pixel Pitch	CMO		mm	
		Pixel Format	1280 horiz By 768 vert. pixels RGB strip arrangement			
		Coating	Hard coating(3H), Anti-glare treatment of the front polarizer			
		Back Light	CMO			

6.Feature and Function

No.	Item	Specification	Remark
1	Teletext	TOP, FLOF, LIST	Top(option)
2	REMOCON	NEC code	PAL/NTSC
3	AV input	1	Rear(RT/RM)
4	S-AV input	1	Side
5	Component input	2	Side, Rear(RT/RM)
6	PERI TV connector	Half SCART: 1	Rear(RZ)
7	PERI TV connector	Full SCART: 1	Rear(RZ)
8	RGB input	1	DVI
9	RS-232	1	D-Sub 9 pin(RM)
10	Discrete IR	1	(RM)
11	D-sub audio input	1	Stereo
12	2 Carrier stereo	BG,DK	
13	NICAM stereo	BG,I,LL'	
14	2 Carrier dual	BG,DK	
15	NICAM dual	BG,I,LL'	
16	DW(Double Window) mode	X	
17	MW(Multi Window) mode	X	
18	Film mode	O	
19	Noise reduction	X	
20	Progressive scan	O	
21	Motion detection	O	
22	SRS WOW	X	
23	Swivel Speaker	X	
24	EZ-pip	X	
25	Local key	Pr+/-, vol+/-, ok, menu, tv/av, power	

7.PC Input Mode

NO	Resoluton	H-freq(kHz)	V-freq(Hz)	Pixel clock(MHz)	Proposed
DVI-PC, Analog RGB					
1	640 x 480	31.469	59.94	25.17	VESA(VGA)
2	640 x 480	35	67	30.24	VESA(VGA)
3	640 x 480	37.500	75.00	31.50	VESA(VGA)
4	800 x 600	35.156	56.25	36.00	VESA(SVGA)
5	800 x 600	37.879	60.31	40.00	VESA(SVGA)
6	800 x 600	48.077	72.18	50.00	VESA(SVGA)
7	800 x 600	46.875	75.00	49.50	VESA(SVGA)
8	1024 x 768	48.363	60.00	65.00	VESA(XGA)
9	1024 x 768	56.476	70.06	75.00	VESA(XGA)
10	1024 x 768	60.023	75.02	78.75	VESA(XGA)
11	1280 x 768	47.693	60.00	80.125	VESA(WXGA)
12	1280 x 720	45.00	60.00	74.375	HDCP DVI Digital 720p(RM Only)
13	1920 x 1080	33.75	60.00	86.375	HDCP DVI Digital 1080i(RM Only)

TIMING CHART

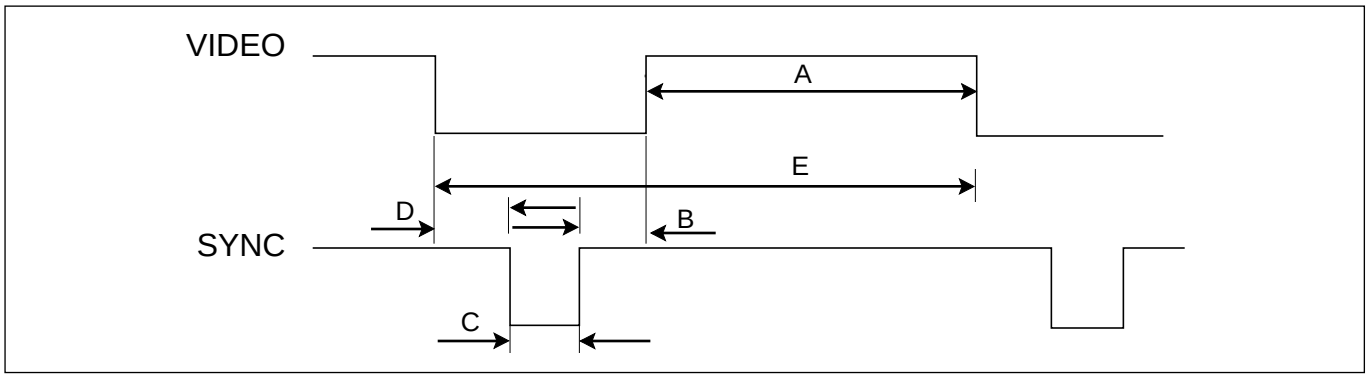

<< Dot Clock **(MHz),** Horizontal Frequency **(kHz)**, Vertical Frequency **(Hz)**, Horizontal etc... **(µs)**, Vertical etc... **(ms) >>**

Mode	H/V Sort	Sync Polarity	Dot Clock	Frequency	Total Period (E)	Video Active Time (A)	Front Porch (B)	Sync Duration (D)	Back Porch (F)	Resolution
1	H	+	25.175	31.469	800	640	16	96	48	**640x480**
	V	–		59.94	525	480	10	2	33	
2	H	–	30.240	35	864	640	64	64	96	**640x480**
	V	+		66.667	525	480	3	3	39	
3	H	–	31.5	37.5	840	640	16	64	120	**640x480**
	V	–		75	500	480	1	3	16	
4	H	–	36	35.156	1024	800	24	72	128	**800x600**
	V	–		56.25	625	600	1	2	22	
5	H	+	40.0	37.879	1056	800	40	128	88	**800x600**
	V	+		60.317	628	600	1	4	23	
6	H	+	50.0	48.077	1040	800	56	120	64	**800x600**
	V	+		72.188	666	600	37	6	23	
7	H	+/–	49.5	46.875	1056	800	16	80	160	**800x600**
	V	+/–		75.0	625	600	1	3	21	
8	H	–	65.0	48.363	1344	1024	24	136	160	**1024x768**
	V	–		60.004	806	768	3	6	29	
9	H	+	75	56.476	1328	1024	24	136	144	**1024x768**
	V	+		70.069	806	768	3	6	29	
10	H	+	78.75	60.023	1312	1024	16	96	176	**1024x768**
	V	–		75.029	800	768	1	3	28	
11	H	+	79.50	47.776	1664	1280	64	128	192	**1280x768**
	V	–		59.870	798	768	3	7	20	

ADJUSTMENT INSTRUCTION

1. Application Object

This instruction is for the application to the LCD TV.

2. Adjustment

2.1 Auto Gain/Offset adjustment

2.1.1 Adjustment preparation

1) Conduct Heat Run with the White Pattern for more than 30 minutes.
2) Connect the signals of Pattern Generator to DVI-I Jack of LCD TV.

2.1.2 Auto Gain/Offset adjustment

1) Use the Pattern Generator (801GF, VG819) to authorize XGA (1024 X 768) for resolution and 16 gray scale signals for patterns. Or authorize 16 gray scale (11 gray scale) signals in accordance with VG819.
2) Press the IN-START Key to convert to the adjustment mode using the adjustment (SVC) remote controller, and press VOL+ Key at the AutoGain menu.
3) Once the adjustment is completed, press the Enter Key to save and finish the adjustment

2.2 EDID (The Extended Display Identification Data) setting

1) Connect D-Sub to DVI-I Cable with DVI-I Jack.
2) Select TV as an input source and press the [Instart] key on the remote control.
3) Select the OPT3 from the OSD menu and set Analog or Digital for DDC data selection.
4) Select Analog for analog data, and Digital for digital data.
5) Connect the DDC automation equipment and write the DDC data.

2.2.1 EDID DATA

[DDC DATA Analog]

	00	01	02	03	04	05	06	07	08	09	0A	0B	0C	0D	0E	0F
00	00	FF	FF	FF	FF	FF	FF	00	1E	6D	0F	56	01	01	01	01
10	00	0E	01	03	01	40	26	78	08	B1	DA	A1	56	48	98	24
20	13	48	4B	2F	CE	00	31	40	01	01	01	01	45	40	45	4F
30	61	40	81	80	01	01	4E	1F	00	90	51	00	1B	30	40	88
40	13	00	A2	0B	32	00	00	18	C3	1E	00	20	41	00	20	30
50	10	60	13	00	A2	0B	32	00	00	1E	00	00	00	FD	00	38
60	4B	1F	3D	0A	00	0A	20	20	20	20	20	20	00	00	00	FC
70	00	52	4D	32	37	4C	5A	35	30	0A	20	20	20	20	00	B8

[DDC DATA Digital]

	00	01	02	03	04	05	06	07	08	09	0A	0B	0C	0D	0E	0F
00	00	FF	FF	FF	FF	FF	FF	00	1E	6D	10	56	01	01	01	01
10	00	0E	01	03	81	40	26	78	08	B1	DA	A1	56	48	98	24
20	13	48	4B	2F	CE	00	31	40	01	01	01	01	45	40	45	4F
30	61	40	81	80	01	01	4E	1F	00	90	51	00	1B	30	40	88
40	13	00	A2	0B	32	00	00	18	C3	1E	00	20	41	00	20	30
50	10	60	13	00	A2	0B	32	00	00	1E	00	00	00	FD	00	38
60	4B	1F	3D	0A	00	0A	20	20	20	20	20	20	00	00	00	FC
70	00	52	4D	32	37	4C	5A	35	30	0A	20	20	20	20	00	77

2.3 HDCP (High-Bandwidth Digital Contents Protection) Set

2.3.1 HDCP DVI(Digital Visual Interface) is the link which transmits HD video of HD and STB when in sleep mode.
This function prevents the hazard of hang display thus securing the security against the contents and copy protection.

2.3.2 To store in EEPROM(AT24C16) in HDCP function connect DVI cable.Detailed work content from work map reference.

Note. : HDCP will temporarily exclude in spec.
HDCP will apply from USA Product later.

3. Shipping Conditions

NO	ITEM			CONDITION	REMARK
1	Power			Off	
2	Volume Level			30	
3	Main Pcture Input			TV	
5	Main Last Channel			Pr 01	
8	Mute			Off	
9	ARC			16 : 9	
10	Station	Auto Program			
		Manual Program			
		Program Edit			
		Favorite Program		None	
11	Picture	PSM		Dynamic	
		Dynamic	Contrast	80	
			Brightness	40	
			Colour	70	
			Sharpness	70	
			Tint	0	NTSC OPTION
14	Sound	SSM		Flat	
		AVL		Off	
		Balance		0	
15	Special	Input		TV	
		Child Lock		Off	
		Auto sleep		Off	
		Language		English(Area Management)	
16	PC	H-Position			
		V-Position		Variable by each mode	
		Clock			
		Phase			
		Auto Configure			

*Option(NTSC)

NO	ITEM	CONDITION	REMARK
1	Side-AV	0	0 : Component2 ON 1 : Video2 On
2	ToolOption	0	0 : 50/41 Tool 1 : 30 Tool
3	HDCP	1	0 : HDCP OFF 1 : HDCP ON
4	Speaker Output	1	0 : Speaker Output e 3W 1 : Speaker Output e 5W
5	DownLoad	0	0 : DownLoad Off 1 : DownLoad ON
6	Country	2	0 : Japan 1 : Korea 2 : North America 3 : Central and South America
7	Canadian Vchip	1	0 : V-Chip Function Off 1 : V-Chip Function ON
8	Screen Size	1	0 : 4 :3 Mode 1 : 16 : 9 Mode
9	S-Video	1	0 : S-Video Off 1 : S-Video on
10	Com Filter	1	0 : Com-Filter Off 1 : Com-Filter On

SVC REMOCON

NO	KEY	FUNTION	REAMARK
1	POWER	To turn the TV on or off	
2	POWER ON	To turn the TV on automatically if the power is supplied to the TV. (Use the POWER key to deactivate): It should be deactivated when delivered.	
3	MUTE	To activate the mute function.	
4	P-CHECK	To check TV screen image easily.	Shortcut keys
5	S-CHECK	To check TV screen sound easily	Shortcut keys
6	ARC	To select size of the main screen (Normal, Spectacle, Wide or Zoom)	Shortcut keys
7	CAPTION	Switch to closed caption broadcasting	
8	TXT	To toggle on/off the teletext mode	
9	TV/AV	To select an external input for the TV screen	
10	TURBO SOUND	To start turbo sound	
11	TURBO PICTURE	To start turbo picture	
12	IN-START	To enter adjustment mode when manufacturing the TV sets. To adjust the screen voltage (automatic): In-start ¡ mute ¡ Adjust ¡ AV(Enter into W/B adjustment mode) W/B adjustment (automatic): After adjusting the screen ¡ W/B adjustment ¡ Exit two times (Adjustment completed)	Use the AV key to enter the screen W/B adjustment mode.
13	ADJ	To enter into the adjustment mode. To adjust horizontal line and sub-brightness.	
14	MPX	To select the multiple sound mode (Mono, Stereo or Foreign language)	
15	EXIT	To release the adjustment mode	
16	APC(PSM)	To easily adjust the screen according to surrounding brightness	
17	ASC(SSM)	To easily adjust sound according to the program type	
18	MULTIMIDIA	To check component input	Shortcut keys
19	FRONT-AV	To check the front AV	Shortcut keys
20	CH ¡	To move channel up/down or to select a function displayed on the screen.	
21	VOL ¡	To adjust the volume or accurately control a specific function.	
22	ENTER	To set a specific function or complete setting.	
23	PIP CH-(OP1)	To move the channel down in the PIP screen. To use as a red key in the teletext mode	
24	PIP CH+(OP2)	To move the channel in the PIP screen To use as a green key in the teletext mode	
25	PIP SWAP(OP3)	To switch between the main and sub screens To use as a yellow key in the teletext mode	
26	PIP INPUT(OP4)	To select the input status in the PIP screen To use as a blue key in the teletext mode	
27	EYE	To set a function that will automatically adjust screen status to match the surrounding brightness so natural color can be displayed.	
28	MENU	To select the functions such as video, voice, function or channel.	
29	IN-STOP	To set the delivery condition status after manufacturing the TV set.	
30	STILL	To halt the main screen in the normal mode, or the sub screen at the PIP screen. Used as a hold key in the teletext mode (Page updating is stopped.)	
31	TIME	Displays the teletext time in the normal mode Enables to select the sub code in the teletext mode	
32	SIZE	Used as the size key in the PIP screen in the normal mode Used as the size key in the teletext mode	
33	MULTI PIP	Used as the index key in the teletext mode (Top index will be displayed if it is the top text.)	
34	POSITION	To select the position of the PIP screen in the normal mode Used as the update key in the teletext mode (Text will be displayed if the current page is updated.)	
35	MODE	Used as Mode in the teletext mode	
36	PIP	To select the simultaneous screen	
37	TILT	To adjust screen tilt	Shortcut keys
38	0~9	To manually select the channel.	

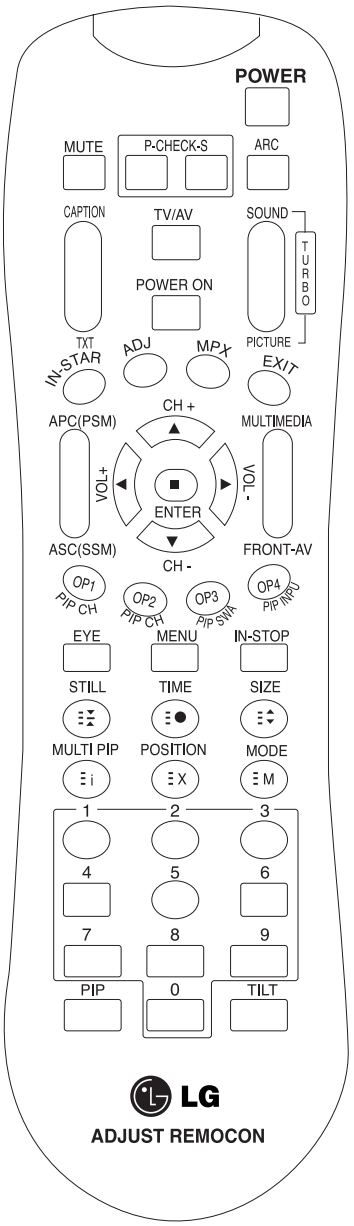

TROUBLESHOOTING

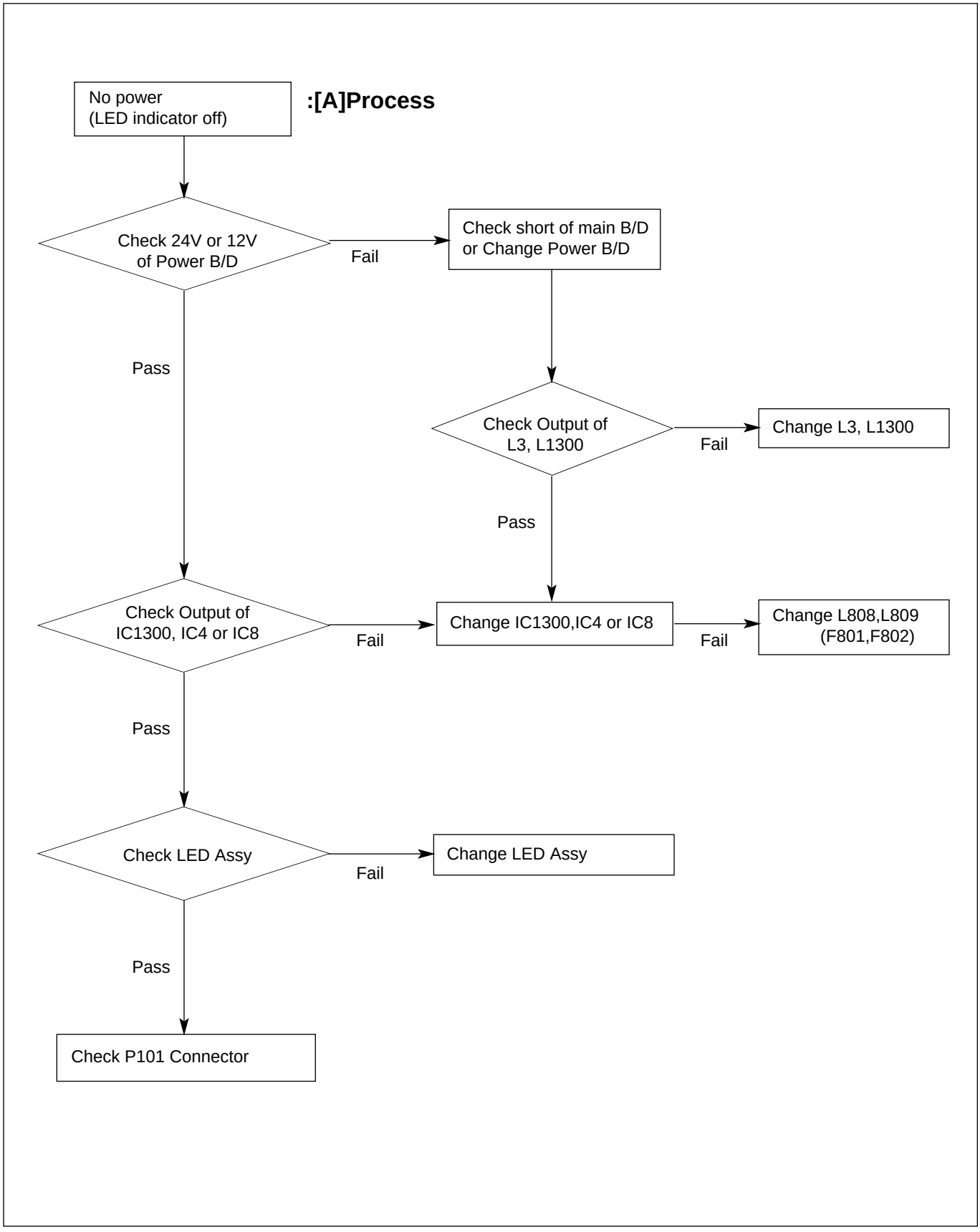

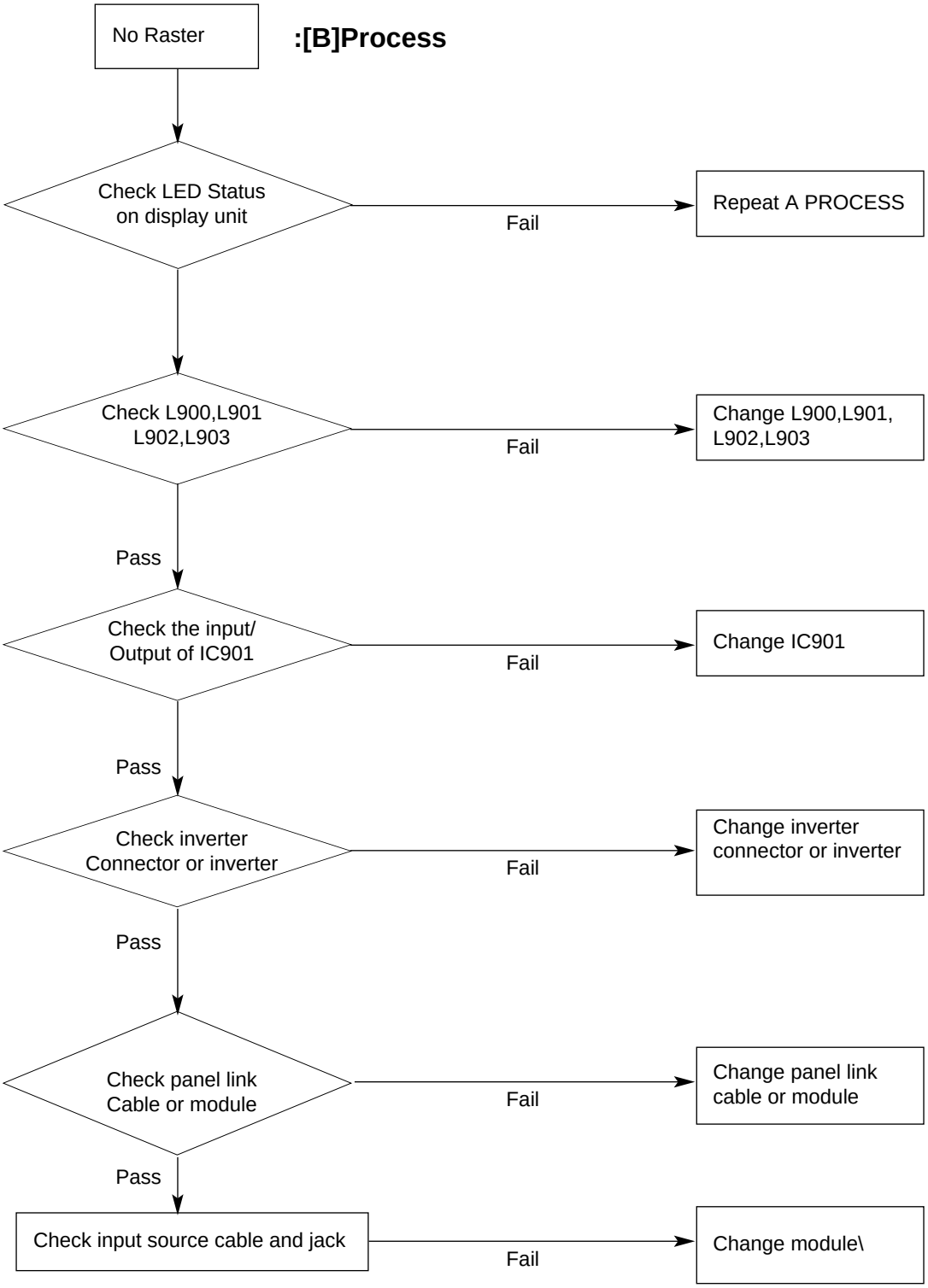
No Raster
:[B]Process
Check LED Status on display unit
Fail
Repeat A PROCESS
Check L900,L901 L902,L903
Fail
Change L900,L901, L902,L903
Pass
Check the input/ Output of IC901
Fail
Change IC901
Pass
Check inverter Connector or inverter
Fail
Change inverter connector or inverter
Pass
Check panel link Cable or module
Fail
Change panel link cable or module
Pass
Check input source cable and jack
Fail
Change module\

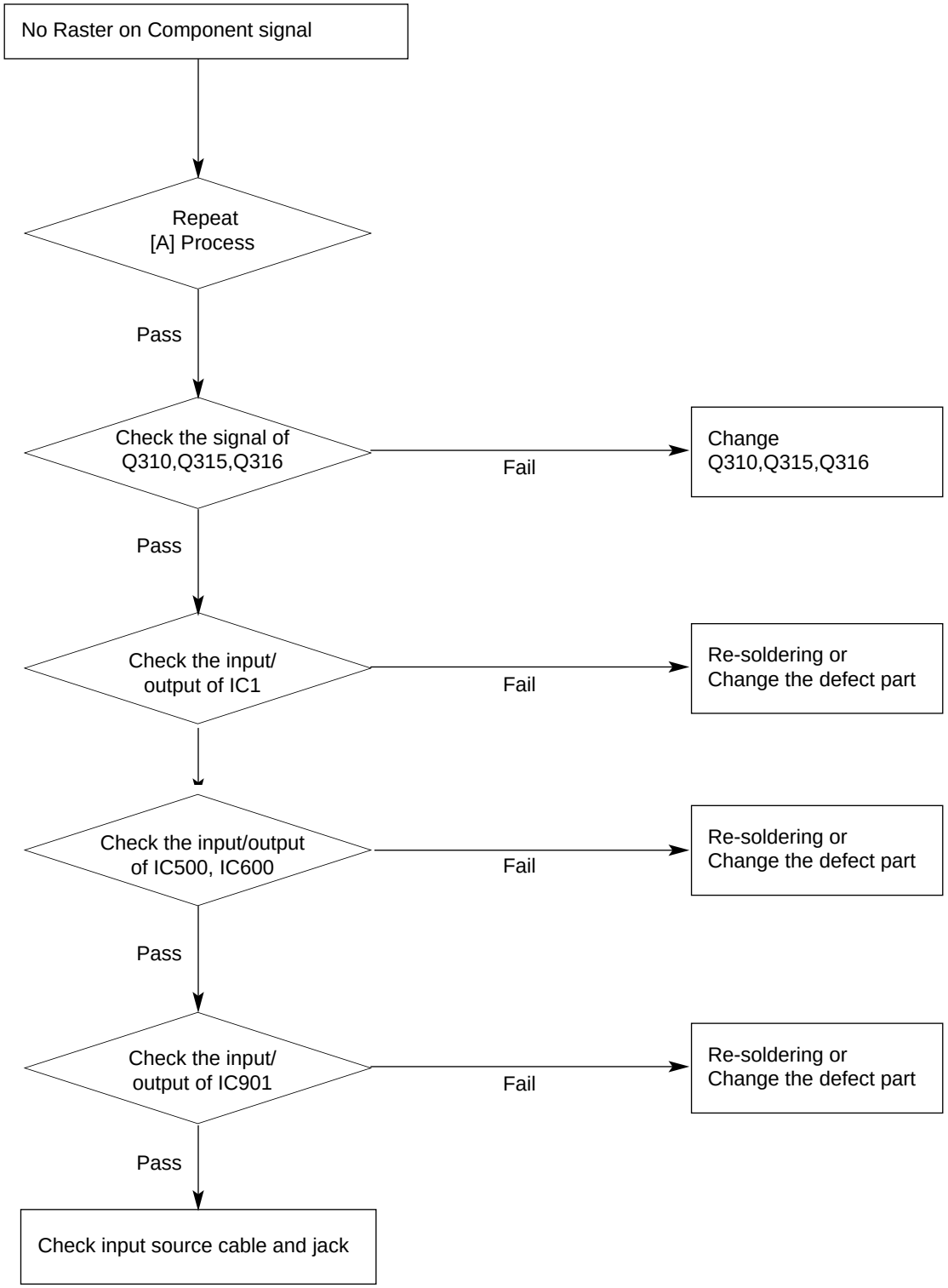
No Raster on Component signal
Repeat
[A] Process
Pass
Check the signal of
Q310,Q315,Q316
Fail
Change
Q310,Q315,Q316
Pass
Check the input/
output of IC1
Fail
Re-soldering or
Change the defect part
Check the input/output
of IC500, IC600
Fail
Re-soldering or
Change the defect part
Pass
Check the input/
output of IC901
Fail
Re-soldering or
Change the defect part
Pass
Check input source cable and jack

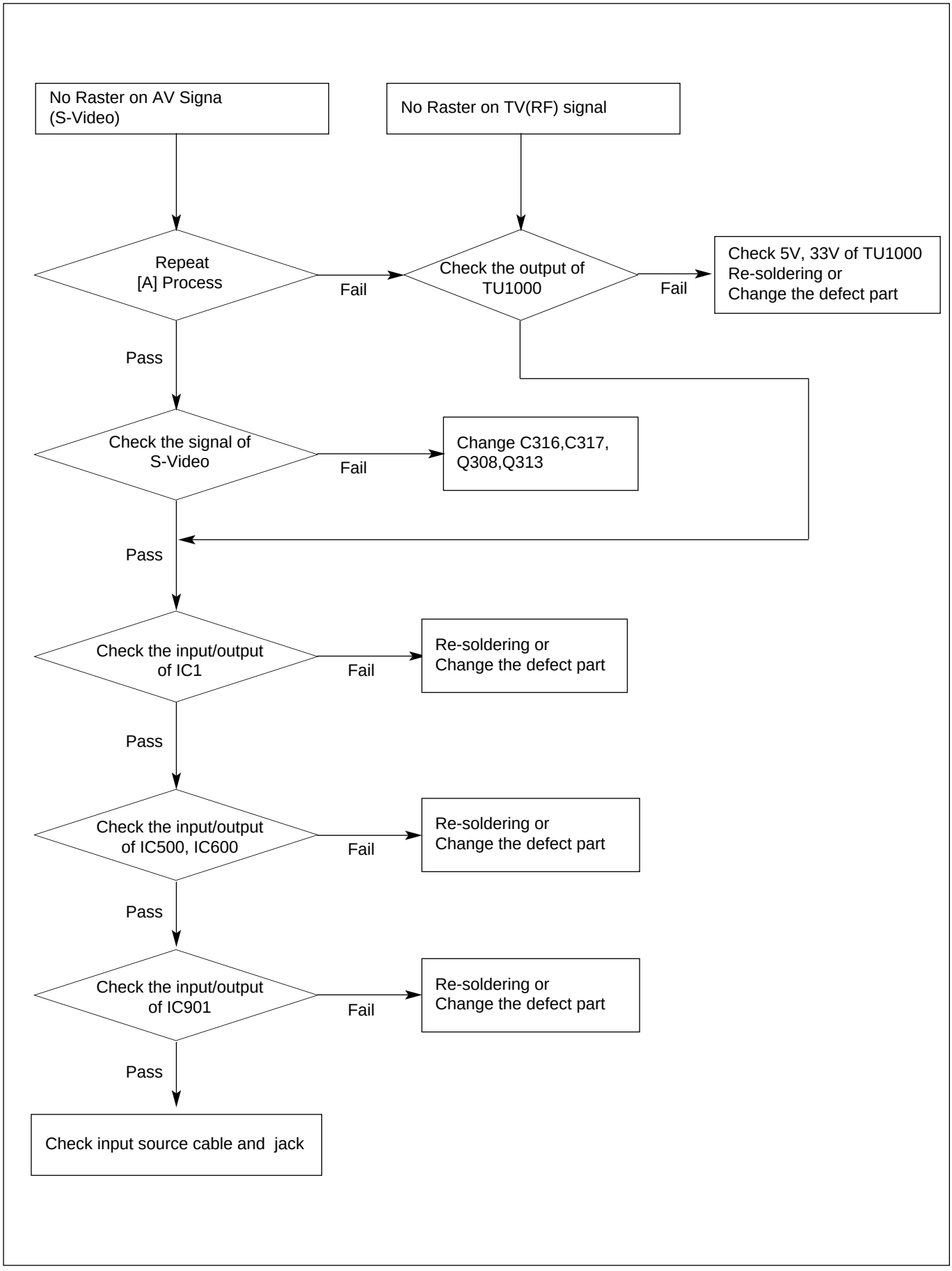
No Raster on AV Signa
(S-Video)
No Raster on TV(RF) signal
Repeat
[A] Process
Fail
Check the output of
TU1000
Fail
Check 5V, 33V of TU1000
Re-soldering or
Change the defect part
Pass
Check the signal of
S-Video
Fail
Change C316,C317,
Q308,Q313
Pass
Check the input/output
of IC1
Fail
Re-soldering or
Change the defect part
Pass
Check the input/output
of IC500, IC600
Fail
Re-soldering or
Change the defect part
Pass
Check the input/output
of IC901
Fail
Re-soldering or
Change the defect part
Pass
Check input source cable and jack

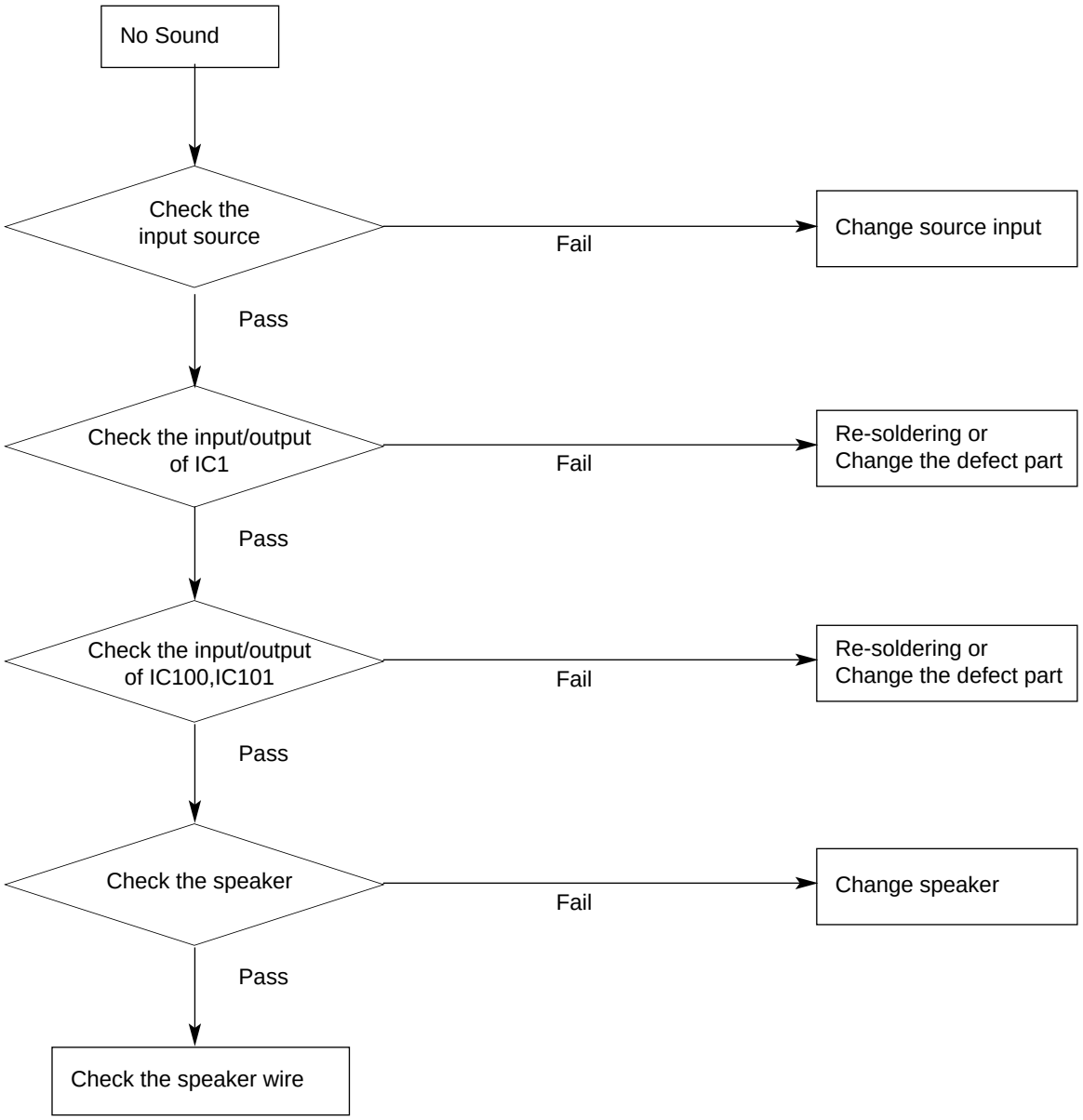
No Sound
Check the input source
Fail
Change source input
Pass
Check the input/output of IC1
Fail
Re-soldering or Change the defect part
Pass
Check the input/output of IC100,IC101
Fail
Re-soldering or Change the defect part
Pass
Check the speaker
Fail
Change speaker
Pass
Check the speaker wire

BLOCK DIAGRAM

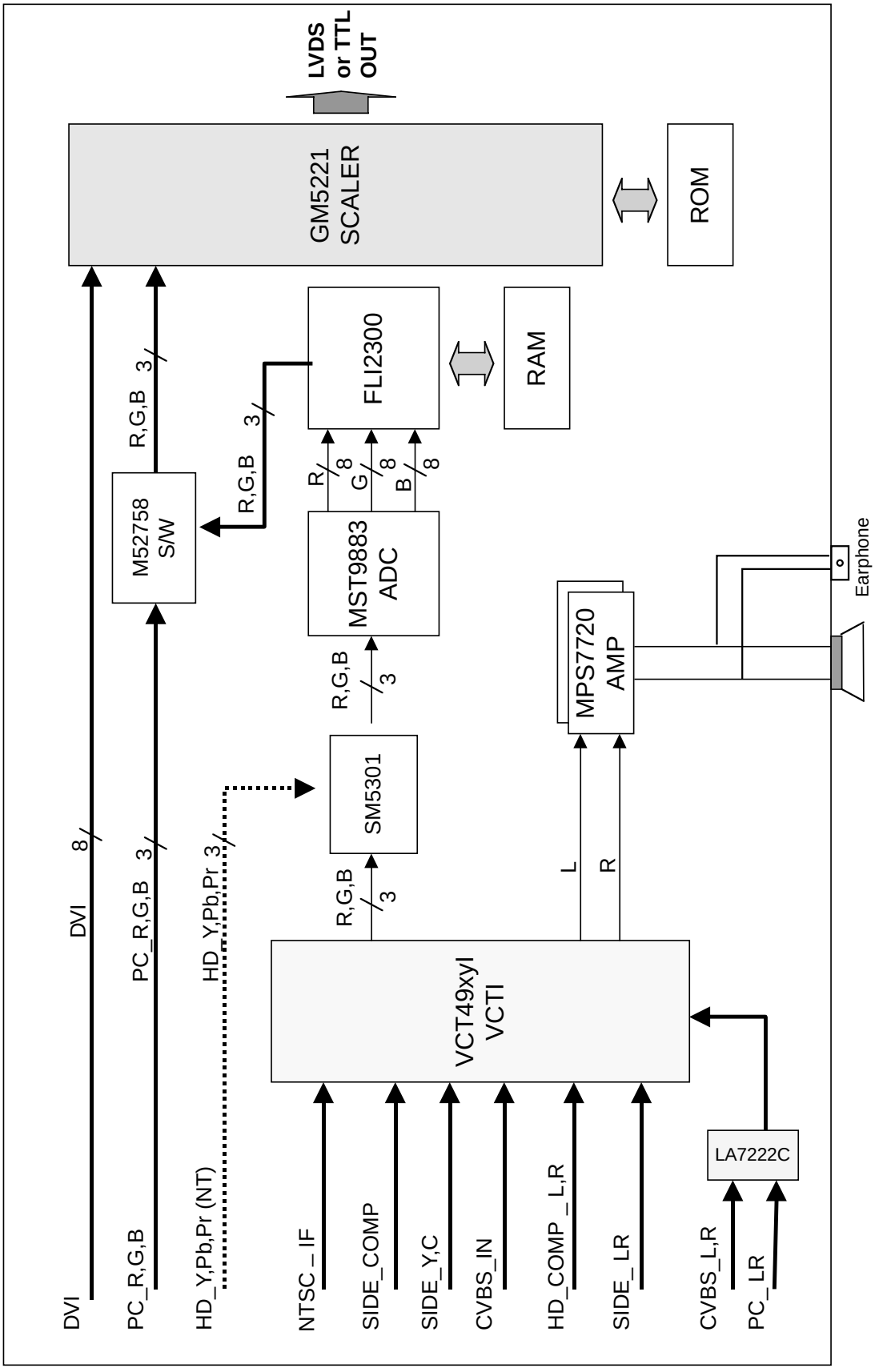

BLOCK DIAGRAM DESCRIPTION

1. Video controller unit and display data conversion unit

The video controller unit receives the video signal inputted to the tuner, AV port (AV1, AV2, S-Video and component) and converts it to the analog RGB signal through the microcomputer (VCTI) combined with the video decoder that integrates various functions in one chip.

Then, it is inputted to the AD converter (AD9883) and generates the 4:4:4 format digital signal. This digital signal is inputted to the picture enhancer (FLI2300), which processes the video signal and converts the image quality enhanced data to an analog RGB signal again before displaying it.

The image quality enhanced de-interlace signal is inputted to the scaler (GM5221) and converted to the LVDS signal by the integrated LVDS IC before being sent to the LCD module.

VCTI is the main microcomputer that processes both video signals and sound signals. It also processes the RF signal received from the tuner.

The scaler enables to adjust timing on the LCD panel, as well as an adjustment of the size and position of the input signal.

The graphic controller unit receives the PC (analog RGB) input and the DVI-D (digital signal), and sends the PC input to the scaler analog port and DVI-D input to the digital port.

The scaler receives two inputs and converts them to the LVDS signal before sending to the module.

2. Power unit

The power unit supplies 33V, 24V and 12V DC power to the main board. 33V DC power is used for the tuner, whereas 24V DC power is directly used by the inverter and the sound amplifier IC. 24V DC power is also used to generate 5V through the regulator. 12V DC power is used for the LCD panel.
5V DC is converted to 3.3V and 1.8V through the regulator, which supplies the necessary power to various ICs, such as VCTI, scaler, FLI2300 and AD9883.

WIRING DIAGRAM

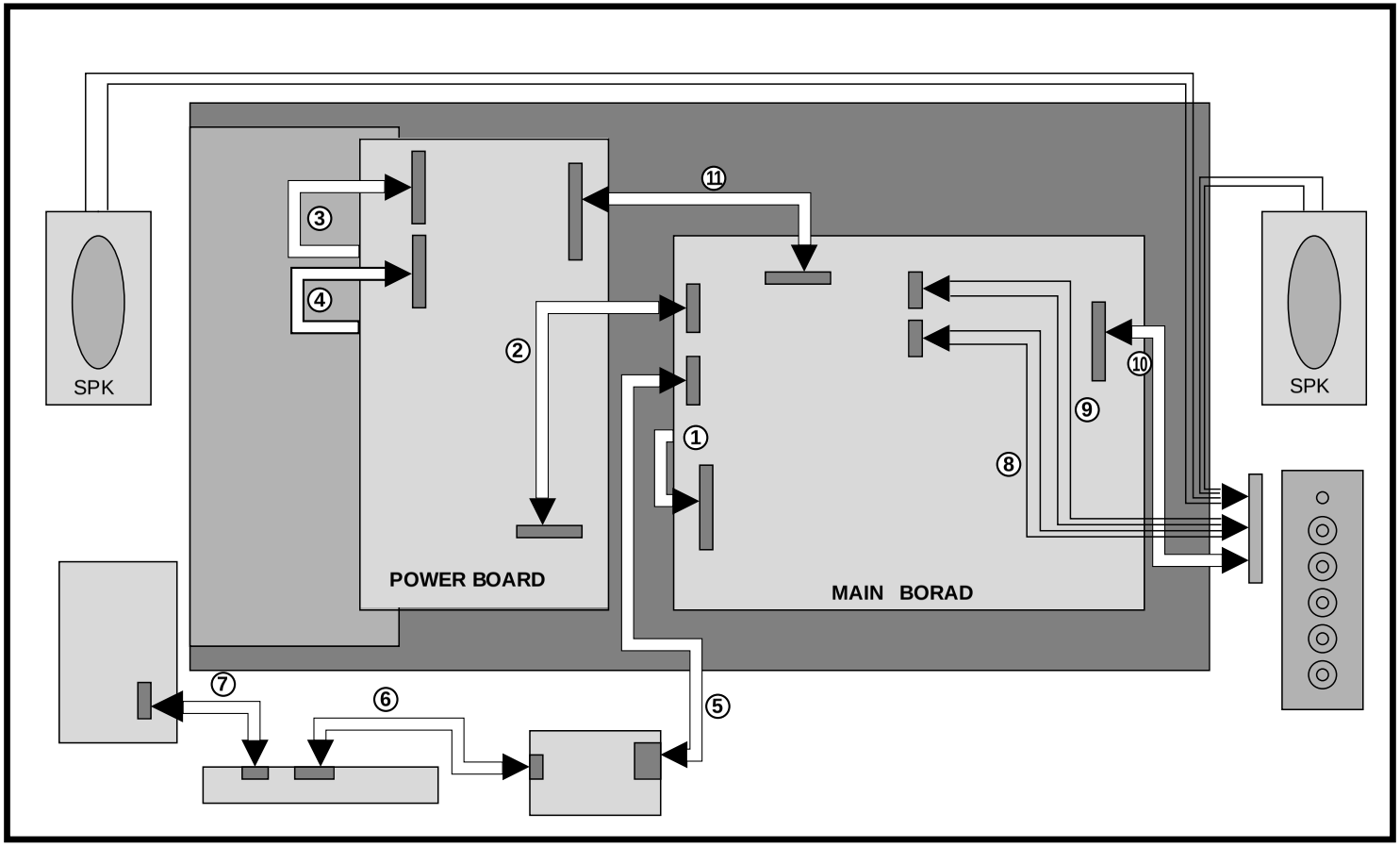

Wiring Part List

No.	Part No.
1	6631T11020F
2	6631T20033F
3	6631T20032F
4	6631T20032E
5	6631T20033B
6	6631T20033C
7	6631T20033D
8	6631T20038C
9	6631T20038B
10	6631T20033E
11	6631T25019K

EXPLODED VIEW

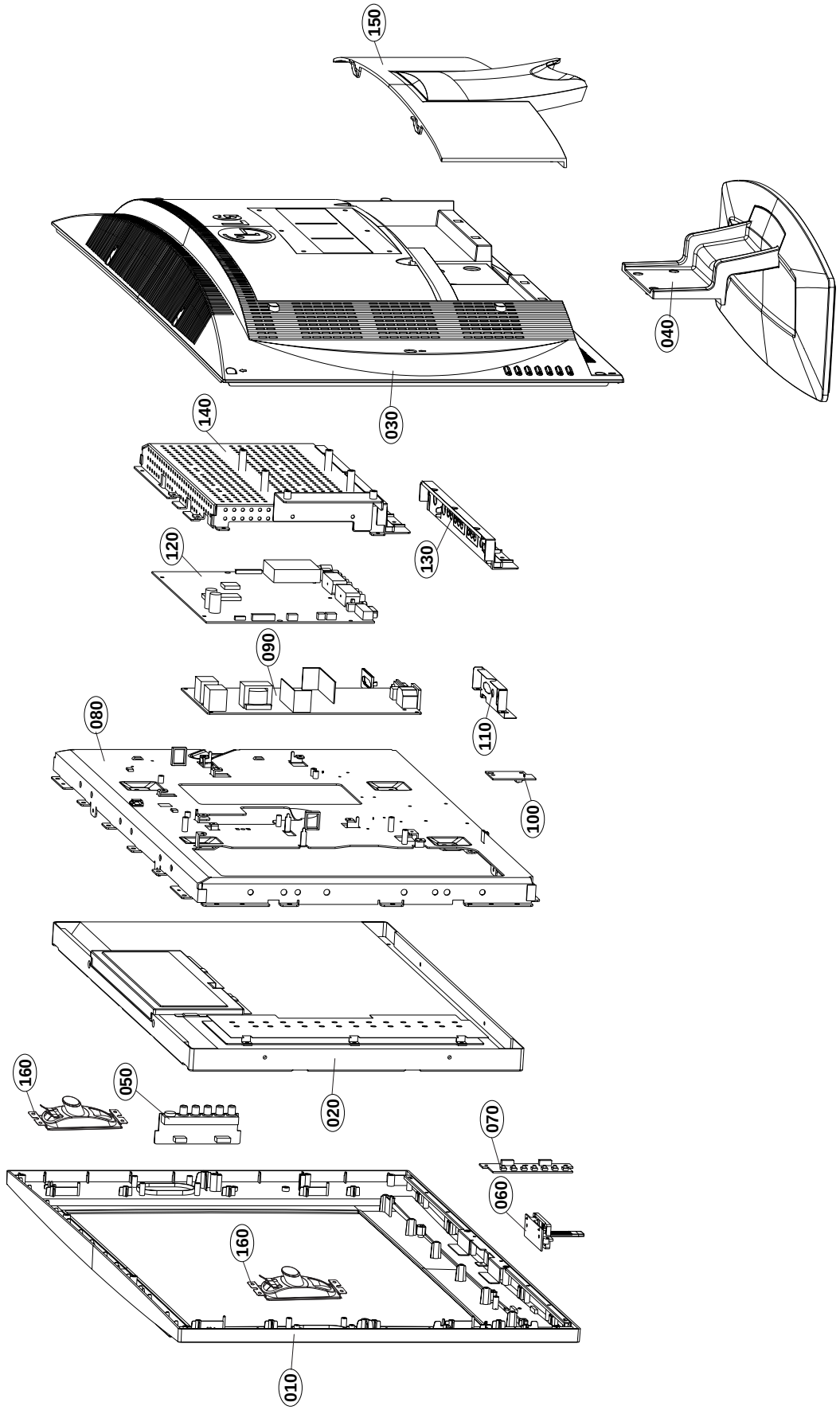

EXPLODED VIEW PARTS LIST

No.	PART NO.	DESCRIPTION
010	3091TKE018L	CABINET ASSEMBLY, RM-27LZ50C BRAND 3091TKE012A 40AF USA SILVER
	3091TKE018G	CABINET ASSEMBLY, RM-27LZ50C BRAND 3091TKE012A 40AF LGEMX C/SKD
020	6304FCI009A	LCD(LIQUID CRYSTAL DISPLAY), V270W1-L04 CHIMEI TFT COLOR MVA WXGA 550NITS LVDS 25MS
030	3809TKE013R	BACK COVER ASSEMBLY, RM-27LZ50C 3808TKE005B 40AF COMMERCIAL
	3809TKE013N	BACK COVER ASSEMBLY, RM-27LZ50C 3808TKE005A 40AF LGEMX C/SKD COMMERCIAL
040	3043TKK171C	TILT SWIVEL ASSEMBLY, RM-26LZ50, NONE LOGO
	3043TKK171D	TILT SWIVEL ASSEMBLY, RM-26LZ50 NONE C/SKD NONE LOGO
050	6871TVT370B	PWB(PCB) ASSEMBLY,VIDEO, RM-32/26/23LZ50 SIDE A/V SUB TOTAL BRAND .
060	6871TST762A	PWB(PCB) ASSEMBLY,SUB, 26/27LZ50 LED & P/SW TOTAL BRAND .
070	6871TST589A	PWB(PCB) ASSEMBLY,SUB, 26LZ50 KEY SUB TOTAL BRAND KEY BOARD
080	4951TKS156E	METAL ASSEMBLY, FRAME CMO RZ-27LZ50
	4951TKS156F	METAL ASSEMBLY, FRAME CMO RZ-27LZ50 C/SKD
090	6871TPT275A	PWB(PCB) ASSEMBLY,POWER, RZ-30LZ50 POWER TOTAL BRAND ML-041A, 23",26",27",30",32" AUTOBAN
100	6871TST588B	PWB(PCB) ASSEMBLY,SUB, 26/27LZ50 IR SUB TOTAL BRAND .
110	4814TKK280A	SHIELD, REAR POWER
120	3313TN2014B	MAIN TOTAL ASSEMBLY, RM-27LZ50C(COMMERCIAL) CMO BRAND ML-041A
130	3551TKK516C	COVER ASSEMBLY, RM/RT-30LZ50 REAR NON NON
	3551TKK516D	COVER ASSEMBLY, RM/RT-30LZ50 REAR NON C/SKD
140	4951TKK169G	METAL ASSEMBLY, REAR RZ-26LZ50
	4951TKK169J	METAL ASSEMBLY, REAR RZ-26LZ50 C/SKD
150	3550TKK516A	COVER, RZ-26LZ50 REAR
160	6400GKTX01C	SPEAKER,FULLRANGE, F1527C-6428-4 K-TONE FULL-RANGE(GENERAL) 4 OHM 7/12W 85DB OTHERS 40*70MM TRACK TYPE

REPLACEMENT PARTS LIST

For Capacitor & Resistors, the charactors at 2nd and 3rd digit in the P/No. means as follows;	CC, CX, CK, CN, CH : Ceramic CQ : Polyestor CE : Electrolytic CF : Fixed Film	RD : Carbon Film RS : Metal Oxide Film RN : Metal Film RH : CHIP, Metal Glazed(Chip) RR : Drawing

DATE: 2004. 11. 20.

*S	*AL	LOC. NO.	PART NO.	DESCRIPTION / SPECIFICATION
		MAIN BOARD		
		CAPACITOR		
		C108	0CE476EK638	47UF KMG 50V M FM5 TP 5
		C1100	0CE106BF618	10UF KME 16V M FL TP5
		C1102	0CE107CK638	"100UF SHL,SD 50V M FM5 TP 5"
		C1112	0CE108EF618	1000UF KMG 16V M FL TP 5
		C1113	0CE108EF618	1000UF KMG 16V M FL TP 5
		C1114	0CE108EF618	1000UF KMG 16V M FL TP 5
		C1115	0CE108EF618	1000UF KMG 16V M FL TP 5
		C119	0CE106BF618	10UF KME 16V M FL TP5
		C120	0CE106BF618	10UF KME 16V M FL TP5
		C404	0CE227EJ638	220UF KMG 35V M FM5 TP 5
		C971	0CE107EF638	100UF KMG 16V M FM5 TP 5
		C1015	0CH6680K416	68PF 50V J NP0 2012 R/TP
		C1016	0CH6680K416	68PF 50V J NP0 2012 R/TP
		C13	0CH6102K406	1000PF 50V J SL 2012 R/TP
		C1303	0CH6101K416	100PF 50V J NP0 2012 R/TP
		C1308	0CH6101K416	100PF 50V J NP0 2012 R/TP
		C14	0CH6102K406	1000PF 50V J SL 2012 R/TP
		C2	0CH6102K406	1000PF 50V J SL 2012 R/TP
		C20	0CH6102K406	1000PF 50V J SL 2012 R/TP
		C237	0CH6102K406	1000PF 50V J SL 2012 R/TP
		C238	0CH6102K406	1000PF 50V J SL 2012 R/TP
		C319	0CH6120K416	12PF 50V J NP0 2012 R/TP
		C321	0CH6120K416	12PF 50V J NP0 2012 R/TP
		C324	0CH6120K416	12PF 50V J NP0 2012 R/TP
		C326	0CH6120K416	12PF 50V J NP0 2012 R/TP
		C327	0CH6120K416	12PF 50V J NP0 2012 R/TP
		C328	0CH6120K416	12PF 50V J NP0 2012 R/TP
		C329	0CH6120K416	12PF 50V J NP0 2012 R/TP
		C331	0CH6150K416	15PF 50V J NP0 2012 R/TP
		C333	0CH6150K416	15PF 50V J NP0 2012 R/TP
		C336	0CH6150K416	15PF 50V J NP0 2012 R/TP
		C338	0CH6150K416	15PF 50V J NP0 2012 R/TP
		C339	0CH6150K416	15PF 50V J NP0 2012 R/TP
		C340	0CH6150K416	15PF 50V J NP0 2012 R/TP
		C341	0CH6150K416	15PF 50V J NP0 2012 R/TP
		C43	0CH6102K406	1000PF 50V J SL 2012 R/TP
		C46	0CH6102K406	1000PF 50V J SL 2012 R/TP
		C50	0CH6102K406	1000PF 50V J SL 2012 R/TP
		C515	0CH6330K416	33PF 50V J NP0 2012 R/TP
		C516	0CH6330K416	33PF 50V J NP0 2012 R/TP
		C53	0CH6102K406	1000PF 50V J SL 2012 R/TP
		C59	0CH6102K406	1000PF 50V J SL 2012 R/TP
		C701	0CH6120K416	12PF 50V J NP0 2012 R/TP
		C702	0CH6120K416	12PF 50V J NP0 2012 R/TP
		C74	0CH6102K406	1000PF 50V J SL 2012 R/TP
		C755	0CH6471K416	470F 50V J NP0 2012 R/TP
		C756	0CH6471K416	470F 50V J NP0 2012 R/TP
		C757	0CH6471K416	470F 50V J NP0 2012 R/TP
		C758	0CH6101K416	100PF 50V J NP0 2012 R/TP
		C83	0CH6102K406	1000PF 50V J SL 2012 R/TP
		C86	0CH6102K406	1000PF 50V J SL 2012 R/TP
		C924	0CH6080K116	8PF 50V D NP0 2012 R/TP
		C925	0CH6080K116	8PF 50V D NP0 2012 R/TP

DATE: 2004. 11. 20.

*S	*AL	LOC. NO.	PART NO.	DESCRIPTION / SPECIFICATION
		C968	0CH6101K416	100PF 50V J NP0 2012 R/TP
		C129	181-007F	"MPE ECQ-V1H224JL3(TR), 50V 0"
		C130	181-007F	"MPE ECQ-V1H224JL3(TR), 50V 0"
		C1001	0CH3103K516	10000PF 50V 10% B(Y5P) 2012
		C1002	0CH3103K516	10000PF 50V 10% B(Y5P) 2012
		C1003	0CH3103K516	10000PF 50V 10% B(Y5P) 2012
		C1004	0CH3103K516	10000PF 50V 10% B(Y5P) 2012
		C1007	0CH3103K516	10000PF 50V 10% B(Y5P) 2012
		C1010	0CK273DK51A	27000PF 2012 50V 10% B(Y5P)
		C107	0CK225DFK4A	"2.2UF 2012 16V 20%,-20% F(Y5"
		C109	0CH3103K516	10000PF 50V 10% B(Y5P) 2012
		C11	0CH3104K566	0.1UF 50V 10% X7R 2012 R/TP
		C110	0CH3103K516	10000PF 50V 10% B(Y5P) 2012
		C113	0CK225DFK4A	"2.2UF 2012 16V 20%,-20% F(Y5"
		C114	0CK225DFK4A	"2.2UF 2012 16V 20%,-20% F(Y5"
		C12	0CH3104K566	0.1UF 50V 10% X7R 2012 R/TP
		C127	0CH3104K566	0.1UF 50V 10% X7R 2012 R/TP
		C128	0CH3104K566	0.1UF 50V 10% X7R 2012 R/TP
		C1300	0CH3104K566	0.1UF 50V 10% X7R 2012 R/TP
		C1302	0CH3103K516	10000PF 50V 10% B(Y5P) 2012
		C1305	0CH3104K566	0.1UF 50V 10% X7R 2012 R/TP
		C1307	0CH3103K516	10000PF 50V 10% B(Y5P) 2012
		C135	0CH3104K566	0.1UF 50V 10% X7R 2012 R/TP
		C136	0CH3104K566	0.1UF 50V 10% X7R 2012 R/TP
		C15	0CH3104K566	0.1UF 50V 10% X7R 2012 R/TP
		C16	0CH3104K566	0.1UF 50V 10% X7R 2012 R/TP
		C18	0CK106EF56A	10UF 3216 16V 10% X7R R/TP
		C19	0CH3104K566	0.1UF 50V 10% X7R 2012 R/TP
		C23	0CH3104K566	0.1UF 50V 10% X7R 2012 R/TP
		C3	0CH3104K566	0.1UF 50V 10% X7R 2012 R/TP
		C306	0CH3104K566	0.1UF 50V 10% X7R 2012 R/TP
		C318	0CH3104K566	0.1UF 50V 10% X7R 2012 R/TP
		C4	0CH3104K566	0.1UF 50V 10% X7R 2012 R/TP
		C42	0CH3104K566	0.1UF 50V 10% X7R 2012 R/TP
		C44	0CH3104K566	0.1UF 50V 10% X7R 2012 R/TP
		C45	0CH3104K566	0.1UF 50V 10% X7R 2012 R/TP
		C49	0CH3104K566	0.1UF 50V 10% X7R 2012 R/TP
		C500	0CH3104K566	0.1UF 50V 10% X7R 2012 R/TP
		C505	0CH3104K566	0.1UF 50V 10% X7R 2012 R/TP
		C506	0CH3104K566	0.1UF 50V 10% X7R 2012 R/TP
		C507	0CH3104K566	0.1UF 50V 10% X7R 2012 R/TP
		C508	0CH3104K566	0.1UF 50V 10% X7R 2012 R/TP
		C509	0CH3104K566	0.1UF 50V 10% X7R 2012 R/TP
		C51	0CH3104K566	0.1UF 50V 10% X7R 2012 R/TP
		C510	0CH3104K566	0.1UF 50V 10% X7R 2012 R/TP
		C511	0CH3104K566	0.1UF 50V 10% X7R 2012 R/TP
		C512	0CH3104K566	0.1UF 50V 10% X7R 2012 R/TP
		C513	0CH3104K566	0.1UF 50V 10% X7R 2012 R/TP
		C514	0CH3104K566	0.1UF 50V 10% X7R 2012 R/TP
		C517	0CH3104K566	0.1UF 50V 10% X7R 2012 R/TP
		C518	0CH3104K566	0.1UF 50V 10% X7R 2012 R/TP
		C519	0CH3104K566	0.1UF 50V 10% X7R 2012 R/TP
		C521	0CH3104K566	0.1UF 50V 10% X7R 2012 R/TP
		C522	0CH3104K566	0.1UF 50V 10% X7R 2012 R/TP

DATE: 2004. 11. 20.

*S	*AL	LOC. NO.	PART NO.	DESCRIPTION / SPECIFICATION
		C523	0CH3104K566	0.1UF 50V 10% X7R 2012 R/TP
		C526	0CH3104K566	0.1UF 50V 10% X7R 2012 R/TP
		C527	0CH3104K566	0.1UF 50V 10% X7R 2012 R/TP
		C528	0CH3104K566	0.1UF 50V 10% X7R 2012 R/TP
		C529	0CH3104K566	0.1UF 50V 10% X7R 2012 R/TP
		C530	0CH3104K566	0.1UF 50V 10% X7R 2012 R/TP
		C531	0CH3104K566	0.1UF 50V 10% X7R 2012 R/TP
		C532	0CH3104K566	0.1UF 50V 10% X7R 2012 R/TP
		C533	0CH3104K566	0.1UF 50V 10% X7R 2012 R/TP
		C534	0CH3104K566	0.1UF 50V 10% X7R 2012 R/TP
		C535	0CH3104K566	0.1UF 50V 10% X7R 2012 R/TP
		C536	0CH3104K566	0.1UF 50V 10% X7R 2012 R/TP
		C537	0CH3104K566	0.1UF 50V 10% X7R 2012 R/TP
		C538	0CH3104K566	0.1UF 50V 10% X7R 2012 R/TP
		C539	0CH3104K566	0.1UF 50V 10% X7R 2012 R/TP
		C540	0CH3104K566	0.1UF 50V 10% X7R 2012 R/TP
		C541	0CH3104K566	0.1UF 50V 10% X7R 2012 R/TP
		C542	0CH3104K566	0.1UF 50V 10% X7R 2012 R/TP
		C544	0CH3104K566	0.1UF 50V 10% X7R 2012 R/TP
		C545	0CH3104K566	0.1UF 50V 10% X7R 2012 R/TP
		C546	0CH3104K566	0.1UF 50V 10% X7R 2012 R/TP
		C547	0CH3104K566	0.1UF 50V 10% X7R 2012 R/TP
		C549	0CH3104K566	0.1UF 50V 10% X7R 2012 R/TP
		C550	0CH3104K566	0.1UF 50V 10% X7R 2012 R/TP
		C551	0CH3104K566	0.1UF 50V 10% X7R 2012 R/TP
		C552	0CH3104K566	0.1UF 50V 10% X7R 2012 R/TP
		C553	0CH3104K566	0.1UF 50V 10% X7R 2012 R/TP
		C554	0CH3104K566	0.1UF 50V 10% X7R 2012 R/TP
		C555	0CH3104K566	0.1UF 50V 10% X7R 2012 R/TP
		C556	0CH3104K566	0.1UF 50V 10% X7R 2012 R/TP
		C557	0CH3104K566	0.1UF 50V 10% X7R 2012 R/TP
		C558	0CH3104K566	0.1UF 50V 10% X7R 2012 R/TP
		C559	0CH3104K566	0.1UF 50V 10% X7R 2012 R/TP
		C567	0CH3104K566	0.1UF 50V 10% X7R 2012 R/TP
		C6	0CH3104K566	0.1UF 50V 10% X7R 2012 R/TP
		C60	0CH3104K566	0.1UF 50V 10% X7R 2012 R/TP
		C606	0CH3104K566	0.1UF 50V 10% X7R 2012 R/TP
		C608	0CH3104K566	0.1UF 50V 10% X7R 2012 R/TP
		C609	0CH3104K566	0.1UF 50V 10% X7R 2012 R/TP
		C61	0CH3104K566	0.1UF 50V 10% X7R 2012 R/TP
		C614	0CH3104K566	0.1UF 50V 10% X7R 2012 R/TP
		C615	0CH3104K566	0.1UF 50V 10% X7R 2012 R/TP
		C616	0CH3104K566	0.1UF 50V 10% X7R 2012 R/TP
		C618	0CH3104K566	0.1UF 50V 10% X7R 2012 R/TP
		C619	0CH3104K566	0.1UF 50V 10% X7R 2012 R/TP
		C620	0CH3104K566	0.1UF 50V 10% X7R 2012 R/TP
		C621	0CH3104K566	0.1UF 50V 10% X7R 2012 R/TP
		C622	0CH3104K566	0.1UF 50V 10% X7R 2012 R/TP
		C623	0CH3104K566	0.1UF 50V 10% X7R 2012 R/TP
		C624	0CH3104K566	0.1UF 50V 10% X7R 2012 R/TP
		C625	0CH3104K566	0.1UF 50V 10% X7R 2012 R/TP
		C627	0CH3104K566	0.1UF 50V 10% X7R 2012 R/TP
		C628	0CH3822K516	8200PF 2012 50V 10% B(Y5P) R
		C629	0CH3823K516	82000PF 2012 50V 10% B(Y5P)
		C632	0CH3104K566	0.1UF 50V 10% X7R 2012 R/TP
		C633	0CH3104K566	0.1UF 50V 10% X7R 2012 R/TP
		C634	0CH3104K566	0.1UF 50V 10% X7R 2012 R/TP
		C635	0CH3104K566	0.1UF 50V 10% X7R 2012 R/TP
		C636	0CH3104K566	0.1UF 50V 10% X7R 2012 R/TP
		C637	0CH3104K566	0.1UF 50V 10% X7R 2012 R/TP
		C638	0CH3104K566	0.1UF 50V 10% X7R 2012 R/TP
		C639	0CH3104K566	0.1UF 50V 10% X7R 2012 R/TP

DATE: 2004. 11. 20.

*S	*AL	LOC. NO.	PART NO.	DESCRIPTION / SPECIFICATION
		C64	0CH3104K566	0.1UF 50V 10% X7R 2012 R/TP
		C640	0CH3104K566	0.1UF 50V 10% X7R 2012 R/TP
		C65	0CH3104K566	0.1UF 50V 10% X7R 2012 R/TP
		C66	0CK106EF56A	10UF 3216 16V 10% X7R R/TP
		C67	0CH3104K566	0.1UF 50V 10% X7R 2012 R/TP
		C700	0CH3104K566	0.1UF 50V 10% X7R 2012 R/TP
		C704	0CH3104K566	0.1UF 50V 10% X7R 2012 R/TP
		C705	0CH3104K566	0.1UF 50V 10% X7R 2012 R/TP
		C75	0CH3104K566	0.1UF 50V 10% X7R 2012 R/TP
		C751	0CH3104K566	0.1UF 50V 10% X7R 2012 R/TP
		C76	0CK106EF56A	10UF 3216 16V 10% X7R R/TP
		C760	0CH3104K566	0.1UF 50V 10% X7R 2012 R/TP
		C761	0CH3104K566	0.1UF 50V 10% X7R 2012 R/TP
		C77	0CK106EF56A	10UF 3216 16V 10% X7R R/TP
		C79	0CK106EF56A	10UF 3216 16V 10% X7R R/TP
		C80	0CK106EF56A	10UF 3216 16V 10% X7R R/TP
		C804	0CH3104K566	0.1UF 50V 10% X7R 2012 R/TP
		C808	0CK105DK94A	"1UF 2012 50V 80%,-20% R/TP F"
		C809	0CK105DK94A	"1UF 2012 50V 80%,-20% R/TP F"
		C81	0CK106EF56A	10UF 3216 16V 10% X7R R/TP
		C810	0CH3104K566	0.1UF 50V 10% X7R 2012 R/TP
		C811	0CH3104K566	0.1UF 50V 10% X7R 2012 R/TP
		C812	0CH3104K566	0.1UF 50V 10% X7R 2012 R/TP
		C813	0CH3104K566	0.1UF 50V 10% X7R 2012 R/TP
		C82	0CH3104K566	0.1UF 50V 10% X7R 2012 R/TP
		C84	0CK106EF56A	10UF 3216 16V 10% X7R R/TP
		C850	0CH3104K566	0.1UF 50V 10% X7R 2012 R/TP
		C851	0CH3104K566	0.1UF 50V 10% X7R 2012 R/TP
		C852	0CH3104K566	0.1UF 50V 10% X7R 2012 R/TP
		C853	0CH3104K566	0.1UF 50V 10% X7R 2012 R/TP
		C854	0CH3104K566	0.1UF 50V 10% X7R 2012 R/TP
		C855	0CH3104K566	0.1UF 50V 10% X7R 2012 R/TP
		C856	0CH3104K566	0.1UF 50V 10% X7R 2012 R/TP
		C864	0CH3104K566	0.1UF 50V 10% X7R 2012 R/TP
		C865	0CH3104K566	0.1UF 50V 10% X7R 2012 R/TP
		C866	0CH3104K566	0.1UF 50V 10% X7R 2012 R/TP
		C867	0CH3104K566	0.1UF 50V 10% X7R 2012 R/TP
		C868	0CH3104K566	0.1UF 50V 10% X7R 2012 R/TP
		C869	0CH3104K566	0.1UF 50V 10% X7R 2012 R/TP
		C870	0CH3104K566	0.1UF 50V 10% X7R 2012 R/TP
		C908	0CH3104K566	0.1UF 50V 10% X7R 2012 R/TP
		C909	0CH3104K566	0.1UF 50V 10% X7R 2012 R/TP
		C910	0CH3104K566	0.1UF 50V 10% X7R 2012 R/TP
		C911	0CH3104K566	0.1UF 50V 10% X7R 2012 R/TP
		C912	0CH3104K566	0.1UF 50V 10% X7R 2012 R/TP
		C913	0CH3104K566	0.1UF 50V 10% X7R 2012 R/TP
		C914	0CH3104K566	0.1UF 50V 10% X7R 2012 R/TP
		C915	0CH3104K566	0.1UF 50V 10% X7R 2012 R/TP
		C916	0CH3104K566	0.1UF 50V 10% X7R 2012 R/TP
		C917	0CH3104K566	0.1UF 50V 10% X7R 2012 R/TP
		C918	0CH3104K566	0.1UF 50V 10% X7R 2012 R/TP
		C919	0CH3104K566	0.1UF 50V 10% X7R 2012 R/TP
		C920	0CH3104K566	0.1UF 50V 10% X7R 2012 R/TP
		C921	0CH3104K566	0.1UF 50V 10% X7R 2012 R/TP
		C922	0CH3104K566	0.1UF 50V 10% X7R 2012 R/TP
		C923	0CH3104K566	0.1UF 50V 10% X7R 2012 R/TP
		C926	0CH3104K566	0.1UF 50V 10% X7R 2012 R/TP
		C927	0CH3104K566	0.1UF 50V 10% X7R 2012 R/TP
		C928	0CH3104K566	0.1UF 50V 10% X7R 2012 R/TP
		C929	0CH3104K566	0.1UF 50V 10% X7R 2012 R/TP
		C930	0CH3104K566	0.1UF 50V 10% X7R 2012 R/TP
		C931	0CH3104K566	0.1UF 50V 10% X7R 2012 R/TP

DATE: 2004. 11. 20.

*S	*AL	LOC. NO.	PART NO.	DESCRIPTION / SPECIFICATION
		C935	0CH3104K566	0.1UF 50V 10% X7R 2012 R/TP
		C936	0CH3104K566	0.1UF 50V 10% X7R 2012 R/TP
		C938	0CH3104K566	0.1UF 50V 10% X7R 2012 R/TP
		C939	0CH3104K566	0.1UF 50V 10% X7R 2012 R/TP
		C940	0CH3104K566	0.1UF 50V 10% X7R 2012 R/TP
		C941	0CH3104K566	0.1UF 50V 10% X7R 2012 R/TP
		C942	0CH3104K566	0.1UF 50V 10% X7R 2012 R/TP
		C943	0CH3104K566	0.1UF 50V 10% X7R 2012 R/TP
		C944	0CH3104K566	0.1UF 50V 10% X7R 2012 R/TP
		C945	0CH3104K566	0.1UF 50V 10% X7R 2012 R/TP
		C946	0CH3104K566	0.1UF 50V 10% X7R 2012 R/TP
		C947	0CH3104K566	0.1UF 50V 10% X7R 2012 R/TP
		C948	0CH3104K566	0.1UF 50V 10% X7R 2012 R/TP
		C949	0CH3104K566	0.1UF 50V 10% X7R 2012 R/TP
		C950	0CH3104K566	0.1UF 50V 10% X7R 2012 R/TP
		C951	0CH3104K566	0.1UF 50V 10% X7R 2012 R/TP
		C952	0CH3104K566	0.1UF 50V 10% X7R 2012 R/TP
		C958	0CK225DFK4A	"2.2UF 2012 16V 20%,-20% F(Y5"
		C96	0CH3104K566	0.1UF 50V 10% X7R 2012 R/TP
		C963	0CH3104K566	0.1UF 50V 10% X7R 2012 R/TP
		C966	0CH3103K516	10000PF 50V 10% B(Y5P) 2012
		C967	0CH3103K516	10000PF 50V 10% B(Y5P) 2012
		C969	0CH3104K566	0.1UF 50V 10% X7R 2012 R/TP
		C970	0CH3104K566	0.1UF 50V 10% X7R 2012 R/TP
		C973	0CH3104K566	0.1UF 50V 10% X7R 2012 R/TP
		C10	0CK104CK56A	0.1UF 1608 50V 10% R/TP X7R
		C115	0CK104CK56A	0.1UF 1608 50V 10% R/TP X7R
		C116	0CK562CK51A	5600PF 1608 50V 10% R/TP B(Y
		C117	0CK562CK51A	5600PF 1608 50V 10% R/TP B(Y
		C118	0CK104CK56A	0.1UF 1608 50V 10% R/TP X7R
		C125	0CK105EK56A	1UF 3216 50V 10% X7R R/TP
		C126	0CK105EK56A	1UF 3216 50V 10% X7R R/TP
		C1301	0CK103CK51A	0.01UF 1608 50V 10% R/TP B(Y
		C1306	0CK103CK51A	0.01UF 1608 50V 10% R/TP B(Y
		C25	0CK104CK56A	0.1UF 1608 50V 10% R/TP X7R
		C26	0CK104CK56A	0.1UF 1608 50V 10% R/TP X7R
		C27	0CK104CK56A	0.1UF 1608 50V 10% R/TP X7R
		C28	0CK334CF94A	"0.33UF 1608 16V 80%,-20% F(Y"
		C29	0CK104CK56A	0.1UF 1608 50V 10% R/TP X7R
		C30	0CK334CF94A	"0.33UF 1608 16V 80%,-20% F(Y"
		C31	0CK104CK56A	0.1UF 1608 50V 10% R/TP X7R
		C32	0CK334CF94A	"0.33UF 1608 16V 80%,-20% F(Y"
		C33	0CK334CF94A	"0.33UF 1608 16V 80%,-20% F(Y"
		C34	0CK104CK56A	0.1UF 1608 50V 10% R/TP X7R
		C35	0CK334CF94A	"0.33UF 1608 16V 80%,-20% F(Y"
		C36	0CK104CK56A	0.1UF 1608 50V 10% R/TP X7R
		C37	0CK334CF94A	"0.33UF 1608 16V 80%,-20% F(Y"
		C38	0CK104CK56A	0.1UF 1608 50V 10% R/TP X7R
		C39	0CK104CK56A	0.1UF 1608 50V 10% R/TP X7R
		C40	0CK104CK56A	0.1UF 1608 50V 10% R/TP X7R
		C41	0CK104CK56A	0.1UF 1608 50V 10% R/TP X7R
		C5001	0CK104CK56A	0.1UF 1608 50V 10% R/TP X7R
		C504	0CK104CK56A	0.1UF 1608 50V 10% R/TP X7R
		C524	0CK104CK56A	0.1UF 1608 50V 10% R/TP X7R
		C611	0CK473CK56A	47000PF 1608 50V 10% R/TP X7
		C612	0CK473CK56A	47000PF 1608 50V 10% R/TP X7
		C613	0CK473CK56A	47000PF 1608 50V 10% R/TP X7
		C626	0CK104CK56A	0.1UF 1608 50V 10% R/TP X7R
		C7	0CK104CK56A	0.1UF 1608 50V 10% R/TP X7R
		C70	0CK104CK56A	0.1UF 1608 50V 10% R/TP X7R
		C71	0CK106EF56A	10UF 3216 16V 10% X7R R/TP
		C72	0CK106EF56A	10UF 3216 16V 10% X7R R/TP

DATE: 2004. 11. 20.

*S	*AL	LOC. NO.	PART NO.	DESCRIPTION / SPECIFICATION
		C73	0CK106EF56A	10UF 3216 16V 10% X7R R/TP
		C750	0CK104CK56A	0.1UF 1608 50V 10% R/TP X7R
		C752	0CK104CK56A	0.1UF 1608 50V 10% R/TP X7R
		C753	0CK104CK56A	0.1UF 1608 50V 10% R/TP X7R
		C759	0CK104CK56A	0.1UF 1608 50V 10% R/TP X7R
		C78	0CK106EF56A	10UF 3216 16V 10% X7R R/TP
		C8	0CK104CK56A	0.1UF 1608 50V 10% R/TP X7R
		C800	0CK105CF94A	"1UF 1608 16V 80%,-20% R/TP F"
		C801	0CK105CF94A	"1UF 1608 16V 80%,-20% R/TP F"
		C802	0CK105CF94A	"1UF 1608 16V 80%,-20% R/TP F"
		C803	0CK105CF94A	"1UF 1608 16V 80%,-20% R/TP F"
		C9	0CK104CK56A	0.1UF 1608 50V 10% R/TP X7R
		C901	0CK103CK51A	0.01UF 1608 50V 10% R/TP B(Y
		C902	0CK103CK51A	0.01UF 1608 50V 10% R/TP B(Y
		C903	0CK103CK51A	0.01UF 1608 50V 10% R/TP B(Y
		C904	0CK103CK51A	0.01UF 1608 50V 10% R/TP B(Y
		C905	0CK103CK51A	0.01UF 1608 50V 10% R/TP B(Y
		C906	0CK103CK51A	0.01UF 1608 50V 10% R/TP B(Y
		C907	0CK103CK51A	0.01UF 1608 50V 10% R/TP B(Y
		C964	0CK104CK56A	0.1UF 1608 50V 10% R/TP X7R
		C352	0CC270DK41A	27PF 2012 50V 5% NP0 R/TP
		C121	0CC100CK41A	10PF 1608 50V 5% R/TP NP0
		C122	0CC100CK41A	10PF 1608 50V 5% R/TP NP0
		C21	0CC102CK41A	1000PF 1608 50V 5% R/TP NP0
		C22	0CC102CK41A	1000PF 1608 50V 5% R/TP NP0
		C24	0CC102CK41A	1000PF 1608 50V 5% R/TP NP0
		C343	0CC270CK41A	27PF 1608 50V 5% R/TP NP0
		C345	0CC270CK41A	27PF 1608 50V 5% R/TP NP0
		C348	0CC270CK41A	27PF 1608 50V 5% R/TP NP0
		C350	0CC270CK41A	27PF 1608 50V 5% R/TP NP0
		C351	0CC270CK41A	27PF 1608 50V 5% R/TP NP0
		C353	0CC270CK41A	27PF 1608 50V 5% R/TP NP0
		C47	0CC220CK41A	22PF 1608 50V 5% R/TP NP0
		C48	0CC220CK41A	22PF 1608 50V 5% R/TP NP0
		C501	0CC101CK41A	100PF 1608 50V 5% R/TP NP0
		C600	0CC220CK41A	22PF 1608 50V 5% R/TP NP0
		C601	0CC220CK41A	22PF 1608 50V 5% R/TP NP0
		C602	0CC220CK41A	22PF 1608 50V 5% R/TP NP0
		C603	0CC220CK41A	22PF 1608 50V 5% R/TP NP0
		C610	0CC102CK41A	1000PF 1608 50V 5% R/TP NP0
		C754	0CC471CK41A	470PF 1608 50V 5% R/TP NP0
		C85	0CC102CK41A	1000PF 1608 50V 5% R/TP NP0
		C111	0CE475EK638	4.7UF KMG 50V 20% FM5 TP 5
		C112	0CE475EK638	4.7UF KMG 50V 20% FM5 TP 5
		C1202	0CE477EJ618	470UF KMG 35V 20% FL TP 5
		C123	0CE477EJ618	470UF KMG 35V 20% FL TP 5
		C124	0CE477EJ618	470UF KMG 35V 20% FL TP 5
		C1299	0CE477EJ618	470UF KMG 35V 20% FL TP 5
		C1304	0CE477EJ618	470UF KMG 35V 20% FL TP 5
		C131	0CE477EJ618	470UF KMG 35V 20% FL TP 5
		C132	0CE477EJ618	470UF KMG 35V 20% FL TP 5
		C133	0CE477EJ618	470UF KMG 35V 20% FL TP 5
		C134	0CE477EJ618	470UF KMG 35V 20% FL TP 5
		C100	0CH8476F691	47UF 16V 20% 105STD (CYL) R/
		C1006	0CH8106J691	10UF 35V 20% 105STD (CYL) R/
		C1008	0CE227WF6DC	220UF MVK 16V 20% R/TP(SMD)
		C17	0CH8106J691	10UF 35V 20% 105STD (CYL) R/
		C201	0CH8106F691	10UF 16V 20% 105STD (CYL) R/
		C212	0CH8106F691	10UF 16V 20% 105STD (CYL) R/
		C213	0CH8106F691	10UF 16V 20% 105STD (CYL) R/
		C216	0CH8106F691	10UF 16V 20% 105STD (CYL) R/
		C225	0CH8106J691	10UF 35V 20% 105STD (CYL) R/

DATE: 2004. 11. 20.

*S	*AL	LOC. NO.	PART NO.	DESCRIPTION / SPECIFICATION
		C226	0CH8106J691	10UF 35V 20% 105STD (CYL) R/
		C227	0CH8106J691	10UF 35V 20% 105STD (CYL) R/
		C228	0CH8106J691	10UF 35V 20% 105STD (CYL) R/
		C231	0CH8106J691	10UF 35V 20% 105STD (CYL) R/
		C232	0CH8106J691	10UF 35V 20% 105STD (CYL) R/
		C300	0CE107WF6DC	100UF MVK 16V 20% R/TP(SMD)
		C301	0CE107WF6DC	100UF MVK 16V 20% R/TP(SMD)
		C302	0CH8106F691	10UF 16V 20% 105STD (CYL) R/
		C303	0CH8106F691	10UF 16V 20% 105STD (CYL) R/
		C304	0CH8106F691	10UF 16V 20% 105STD (CYL) R/
		C307	0CH8106F691	10UF 16V 20% 105STD (CYL) R/
		C308	0CH8476H691	47UF 25V 20% 105STD (CYL) R/
		C309	0CH8106F691	10UF 16V 20% 105STD (CYL) R/
		C312	0CH8106F691	10UF 16V 20% 105STD (CYL) R/
		C313	0CH8476H691	47UF 25V 20% 105STD (CYL) R/
		C314	0CH8106F691	10UF 16V 20% 105STD (CYL) R/
		C315	0CH8106F691	10UF 16V 20% 105STD (CYL) R/
		C316	0CH8106F691	10UF 16V 20% 105STD (CYL) R/
		C317	0CH8106F691	10UF 16V 20% 105STD (CYL) R/
		C5	0CE475WJ6DC	4.7UF MVK 35V 20% R/TP(SMD)
		C502	0CH8476F691	47UF 16V 20% 105STD (CYL) R/
		C503	0CH8476F691	47UF 16V 20% 105STD (CYL) R/
		C52	0CH8476F691	47UF 16V 20% 105STD (CYL) R/
		C520	0CH8106F691	10UF 16V 20% 105STD (CYL) R/
		C525	0CH8106F691	10UF 16V 20% 105STD (CYL) R/
		C54	0CH8476F691	47UF 16V 20% 105STD (CYL) R/
		C543	0CH8476F691	47UF 16V 20% 105STD (CYL) R/
		C55	0CH8476H691	47UF 25V 20% 105STD (CYL) R/
		C560	0CH8476F691	47UF 16V 20% 105STD (CYL) R/
		C566	0CH8476F691	47UF 16V 20% 105STD (CYL) R/
		C604	0CH8476F691	47UF 16V 20% 105STD (CYL) R/
		C605	0CH8476F691	47UF 16V 20% 105STD (CYL) R/
		C607	0CH8476F691	47UF 16V 20% 105STD (CYL) R/
		C62	0CH8476F691	47UF 16V 20% 105STD (CYL) R/
		C63	0CH8476F691	47UF 16V 20% 105STD (CYL) R/
		C703	0CE107WF6DC	100UF MVK 16V 20% R/TP(SMD)
		C805	0CE227WF6DC	220UF MVK 16V 20% R/TP(SMD)
		C806	0CE227WF6DC	220UF MVK 16V 20% R/TP(SMD)
		C807	0CE227WF6DC	220UF MVK 16V 20% R/TP(SMD)
		C814	0CE227WF6DC	220UF MVK 16V 20% R/TP(SMD)
		C815	0CH8476F691	47UF 16V 20% 105STD (CYL) R/
		C857	0CE227WF6DC	220UF MVK 16V 20% R/TP(SMD)
		C858	0CH8476F691	47UF 16V 20% 105STD (CYL) R/
		C859	0CH8476F691	47UF 16V 20% 105STD (CYL) R/
		C860	0CH8476F691	47UF 16V 20% 105STD (CYL) R/
		C861	0CH8476F691	47UF 16V 20% 105STD (CYL) R/
		C862	0CH8476F691	47UF 16V 20% 105STD (CYL) R/
		C863	0CH8476F691	47UF 16V 20% 105STD (CYL) R/
		C87	0CH8476F691	47UF 16V 20% 105STD (CYL) R/
		C88	0CH8476H691	47UF 25V 20% 105STD (CYL) R/
		C900	0CH8476F691	47UF 16V 20% 105STD (CYL) R/
		C953	0CH8476F691	47UF 16V 20% 105STD (CYL) R/
		C957	0CH8476F691	47UF 16V 20% 105STD (CYL) R/
		C959	0CH8476F691	47UF 16V 20% 105STD (CYL) R/
		C97	0CH8476H691	47UF 25V 20% 105STD (CYL) R/
		C972	0CH8476H691	47UF 25V 20% 105STD (CYL) R/
DIODEs				
		D100	0DRFC00288A	SS14 FAIR CHILD R/TP SMA 20-
		D101	0DRFC00288A	SS14 FAIR CHILD R/TP SMA 20-
		IC751	0DRSE00018A	SRV05-4.TC SEMTECH R/TP SOT2

DATE: 2004. 11. 20.

*S	*AL	LOC. NO.	PART NO.	DESCRIPTION / SPECIFICATION
		IC754	0DRSE00018A	SRV05-4.TC SEMTECH R/TP SOT2
		ZD1300	0DR340009AA	MBRS340 TP FAIRCHILD NON 40V
		ZD1301	0DR340009AA	MBRS340 TP FAIRCHILD NON 40V
		ZD901	0DR340009AA	MBRS340 TP FAIRCHILD NON 40V
		D107	0DS226009AA	KDS226 TP KEC SOT-23 80V 30
		D711	0DD184009AA	KDS184 TP KEC - 85V - - - 30
		D102	0DS181009AA	KDS181 TP KEC SOT-23 80V 3
		D103	0DS181009AA	KDS181 TP KEC SOT-23 80V 3
		D104	0DZ620009HB	UDZ S 6.2B TP ROHM SOD323 20
		D105	0DZ620009HB	UDZ S 6.2B TP ROHM SOD323 20
		D703	0DZ510009EE	UDZ S 5.1B TP ROHM-K SOD323
		D704	0DZ510009EE	UDZ S 5.1B TP ROHM-K SOD323
		ZD101	0DZ510009EE	UDZ S 5.1B TP ROHM-K SOD323
		ZD215	0DZ510009EE	UDZ S 5.1B TP ROHM-K SOD323
		ZD216	0DZ510009EE	UDZ S 5.1B TP ROHM-K SOD323
		ZD217	0DZ510009EE	UDZ S 5.1B TP ROHM-K SOD323
		ZD218	0DZ510009EE	UDZ S 5.1B TP ROHM-K SOD323
		ZD219	0DZ510009EE	UDZ S 5.1B TP ROHM-K SOD323
		ZD220	0DZ510009EE	UDZ S 5.1B TP ROHM-K SOD323
		ZD222	0DZ510009EE	UDZ S 5.1B TP ROHM-K SOD323
		D700	0DZ510009EE	UDZ S 5.1B TP ROHM-K SOD323
		D701	0DZ510009EE	UDZ S 5.1B TP ROHM-K SOD323
		D702	0DZ510009EE	UDZ S 5.1B TP ROHM-K SOD323
		D705	0DZ510009EE	UDZ S 5.1B TP ROHM-K SOD323
		D706	0DZ510009EE	UDZ S 5.1B TP ROHM-K SOD323
		ZD203	0DZ510009EE	UDZ S 5.1B TP ROHM-K SOD323
		ZD204	0DZ510009EE	UDZ S 5.1B TP ROHM-K SOD323
		ZD207	0DZ510009EE	UDZ S 5.1B TP ROHM-K SOD323
		ZD208	0DZ510009EE	UDZ S 5.1B TP ROHM-K SOD323
		ZD210	0DZ510009EE	UDZ S 5.1B TP ROHM-K SOD323
		ZD213	0DZ510009EE	UDZ S 5.1B TP ROHM-K SOD323
		ZD214	0DZ510009EE	UDZ S 5.1B TP ROHM-K SOD323
		ZD221	0DZ510009EE	UDZ S 5.1B TP ROHM-K SOD323
		ZD5001	0DZ510009EE	UDZ S 5.1B TP ROHM-K SOD323
		ZD5002	0DZ510009EE	UDZ S 5.1B TP ROHM-K SOD323
		ZD5003	0DZ510009EE	UDZ S 5.1B TP ROHM-K SOD323
		ZD851	0DZ510009EE	UDZ S 5.1B TP ROHM-K SOD323
		ZD852	0DZ510009EE	UDZ S 5.1B TP ROHM-K SOD323
		ZD1000	0DZ330009DF	MTZJ33B TP ROHM-K DO34 0.5W
		ZD10	0DZ910009FE	UDZS 9.1B TP ROHM - - 9.1V -
IC				
		IC3	0IKE702700D	"KIA7027AF 3, SOT-89 TP RESET"
		IC200	0ISA722200A	LA7222 (1280 AUDIO) - - - -
		IC501	0IMMREB010A	"M12L64322A-6T ESMT 86P,TSOP"
		IC749	0IMMRSG036A	"M24C02-WMN6T(P),LF SGS-THOMS"
		IC753	0IMMRSG036A	"M24C02-WMN6T(P),LF SGS-THOMS"
		IC907	0IMCRAL006A	AT24C16AN-10SI-2.7 ATMEL 8P
		IC918	0IMCRAL006A	AT24C16AN-10SI-2.7 ATMEL 8P
		IC100	0IMCRMZ002A	MP7720 MONOLITHIC POWER SYST
		IC101	0IMCRMZ002A	MP7720 MONOLITHIC POWER SYST
		IC1300	0IMCRMZ001A	MP1583DN MONOLITHIC POWER SY
		IC1301	0IMCRMZ001A	MP1583DN MONOLITHIC POWER SY
		IC500	0IMCRGN002C	FLI2300BD GENESIS 208P PQFP
		IC750	0IMCRSG010A	ST3232CDR SGS-THOMSON SOP16
		IC850	0IMCRMI006A	"M52758FP MITSUBISHI 36PIN, R"
		IC904	0IMCRMZ001A	MP1583DN MONOLITHIC POWER SY
		IC1	0IPRPMN003C	VCT49XYF C7(NTSC+PAL) MICRON
		IC600	0IPRPM3002B	"MST9883C-110 MSTAR 80P,LQFP"
		IC800	0IPRPNP001A	"SM5301BS(ATSC DTV) NPC 28P,H"
		IC901	0IPRPGN014A	GM5221H(HDCP) GENESIS 208P Q

DATE: 2004. 11. 20.

*S	*AL	LOC. NO.	PART NO.	DESCRIPTION / SPECIFICATION
		IC2	0IPMGK2001B	AIC1117A-33CYTR(BS33) AIC SO
		IC300	0IPMGKE039A	"KIA78D09F KEC 3P,DPAK R/TP 9"
		IC4	0IPMGK2001B	AIC1117A-33CYTR(BS33) AIC SO
		IC505	0IPMGSG018D	"LD1086DT18TR SGS-THOMSON 3P,"
		IC6	0IPMGSG018D	"LD1086DT18TR SGS-THOMSON 3P,"
		IC601	0IPMGK2001B	AIC1117A-33CYTR(BS33) AIC SO
		IC604	0IPMGFA061A	"FAN1587AD33X FAIRCHILD 3P,DP"
		IC8	0IMCRFA015A	KA7805R FAIRCHILD 2P D-PAK R
		IC905	0IPMGFA061A	"FAN1587AD33X FAIRCHILD 3P,DP"
		IC906	0IPMGSG018D	"LD1086DT18TR SGS-THOMSON 3P,"
		IC103	0ISS780800J	"KA78M08R 3P,D-PAK TP VOL. RE"
		IC2000	0IMO140662A	"MC14066BDR2 14P,SOIC TP BILA"
		IC702	0IMO140662A	"MC14066BDR2 14P,SOIC TP BILA"
		IC752	0IMCRTI001A	SN74HCT157D TEXAS INSTRUMENT
COIL & CORE & INDUCTOR				
		L104	6140TBZ045A	"38.5UH(DIP), 6A, P7.5, DR8.3"
		L105	6140TBZ045A	"38.5UH(DIP), 6A, P7.5, DR8.3"
		L1300	6140VR0008B	SLF12575T-150M3R2 15UH SMD
		L1301	6140VR0008B	SLF12575T-150M3R2 15UH SMD
		L906	6140VR0008B	SLF12575T-150M3R2 15UH SMD
		L100	6210TCE001G	HH-1M3216-501 CERATEC 3216MM
		L1002	6210TCE001G	HH-1M3216-501 CERATEC 3216MM
		L3	6210TCE001G	HH-1M3216-501 CERATEC 3216MM
		L301	6210TCE001A	HB-1S2012-080JT CERATEC 2012
		L302	6210TCE001A	HB-1S2012-080JT CERATEC 2012
		L304	6210TCE001G	HH-1M3216-501 CERATEC 3216MM
		L311	6210TCE001G	HH-1M3216-501 CERATEC 3216MM
		L4	6210TCE001G	HH-1M3216-501 CERATEC 3216MM
		L401	6210TCE001G	HH-1M3216-501 CERATEC 3216MM
		L500	6210TCE001G	HH-1M3216-501 CERATEC 3216MM
		L501	6210TCE001G	HH-1M3216-501 CERATEC 3216MM
		L502	6210TCE001G	HH-1M3216-501 CERATEC 3216MM
		L503	6210TCE001G	HH-1M3216-501 CERATEC 3216MM
		L504	6210TCE001G	HH-1M3216-501 CERATEC 3216MM
		L505	6210TCE001G	HH-1M3216-501 CERATEC 3216MM
		L600	6210TCE001G	HH-1M3216-501 CERATEC 3216MM
		L601	6210TCE001G	HH-1M3216-501 CERATEC 3216MM
		L602	6210TCE001G	HH-1M3216-501 CERATEC 3216MM
		L701	6210TCE001G	HH-1M3216-501 CERATEC 3216MM
		L800	6210TCE001G	HH-1M3216-501 CERATEC 3216MM
		L850	6210TCE001G	HH-1M3216-501 CERATEC 3216MM
		L900	6210TCE001G	HH-1M3216-501 CERATEC 3216MM
		L901	6210TCE001G	HH-1M3216-501 CERATEC 3216MM
		L902	6210TCE001G	HH-1M3216-501 CERATEC 3216MM
		L903	6210TCE001G	HH-1M3216-501 CERATEC 3216MM
		L202	6210TCE001A	HB-1S2012-080JT CERATEC 2012
		L203	6210TCE001A	HB-1S2012-080JT CERATEC 2012
		L207	6210TCE001A	HB-1S2012-080JT CERATEC 2012
		L208	6210TCE001A	HB-1S2012-080JT CERATEC 2012
		L211	6210TCE001A	HB-1S2012-080JT CERATEC 2012
		L212	6210TCE001A	HB-1S2012-080JT CERATEC 2012
		L5000	6210TCE001G	HH-1M3216-501 CERATEC 3216MM
		L603	6210TCE001A	HB-1S2012-080JT CERATEC 2012
		L904	6210TCE001G	HH-1M3216-501 CERATEC 3216MM
		L1	0LC1032101A	10UH 10% 3216 R/TC FI-C3216-
		L1001	0LC1020101A	1UH 10% 2012 R/TC FI-B2012-1
		L11	0LC1032101A	10UH 10% 3216 R/TC FI-C3216-
		L13	0LC1032101A	10UH 10% 3216 R/TC FI-C3216-
		L14	0LC1032101A	10UH 10% 3216 R/TC FI-C3216-
		L15	0LC1032101A	10UH 10% 3216 R/TC FI-C3216-

DATE: 2004. 11. 20.

*S	*AL	LOC. NO.	PART NO.	DESCRIPTION / SPECIFICATION
		L17	0LC1032101A	10UH 10% 3216 R/TC FI-C3216-
		L2	0LC1032101A	10UH 10% 3216 R/TC FI-C3216-
		L402	0LC1532101A	15UH 10% 3216 R/TC FI-C3216-
		L403	0LC1532101A	15UH 10% 3216 R/TC FI-C3216-
		L7	0LC1032101A	10UH 10% 3216 R/TC FI-C3216-
		L10	0LC1032101A	10UH 10% 3216 R/TC FI-C3216-
		L12	0LC1032101A	10UH 10% 3216 R/TC FI-C3216-
		L16	0LC1032101A	10UH 10% 3216 R/TC FI-C3216-
		L306	0LC1532101A	15UH 10% 3216 R/TC FI-C3216-
		L307	0LC1532101A	15UH 10% 3216 R/TC FI-C3216-
		L308	0LC1532101A	15UH 10% 3216 R/TC FI-C3216-
		L309	0LC1532101A	15UH 10% 3216 R/TC FI-C3216-
		L310	0LC1532101A	15UH 10% 3216 R/TC FI-C3216-
		L8	0LC1032101A	10UH 10% 3216 R/TC FI-C3216-
		L9	0LC1032101A	10UH 10% 3216 R/TC FI-C3216-
FET & TRANSISTOR				
		IC1101	0TF492509AA	SI4925DY TP TEMIC 30V 6.1A
		Q1000	0TR388109AA	KTC3881 CHIP TP KEC - -
		Q1101	0TR387500AA	CHIP 2SC3875S(ALY) BK KEC -
		Q212	0TR387500AA	CHIP 2SC3875S(ALY) BK KEC -
		Q300	0TR387500AA	CHIP 2SC3875S(ALY) BK KEC -
		Q302	0TR387500AA	CHIP 2SC3875S(ALY) BK KEC -
		Q303	0TR387500AA	CHIP 2SC3875S(ALY) BK KEC -
		Q304	0TR387500AA	CHIP 2SC3875S(ALY) BK KEC -
		Q318	0TR387500AA	CHIP 2SC3875S(ALY) BK KEC -
		Q701	0TR387500AA	CHIP 2SC3875S(ALY) BK KEC -
		Q100	0TR387500AA	CHIP 2SC3875S(ALY) BK KEC -
		Q101	0TR150400BA	CHIP 2SA1504S(ASY) BK KEC -
		Q12	0TR150400BA	CHIP 2SA1504S(ASY) BK KEC -
		Q13	0TR150400BA	CHIP 2SA1504S(ASY) BK KEC -
		Q14	0TR150400BA	CHIP 2SA1504S(ASY) BK KEC -
		Q15	0TR387500AA	CHIP 2SC3875S(ALY) BK KEC -
		Q16	0TR387500AA	CHIP 2SC3875S(ALY) BK KEC -
		Q17	0TR387500AA	CHIP 2SC3875S(ALY) BK KEC -
		Q210	0TR387500AA	CHIP 2SC3875S(ALY) BK KEC -
		Q211	0TR387500AA	CHIP 2SC3875S(ALY) BK KEC -
		Q213	0TR387500AA	CHIP 2SC3875S(ALY) BK KEC -
		Q301	0TR387500AA	CHIP 2SC3875S(ALY) BK KEC -
		Q305	0TR150400BA	CHIP 2SA1504S(ASY) BK KEC -
		Q306	0TR150400BA	CHIP 2SA1504S(ASY) BK KEC -
		Q308	0TR387500AA	CHIP 2SC3875S(ALY) BK KEC -
		Q310	0TR387500AA	CHIP 2SC3875S(ALY) BK KEC -
		Q313	0TR387500AA	CHIP 2SC3875S(ALY) BK KEC -
		Q315	0TR387500AA	CHIP 2SC3875S(ALY) BK KEC -
		Q316	0TR387500AA	CHIP 2SC3875S(ALY) BK KEC -
		Q317	0TR387500AA	CHIP 2SC3875S(ALY) BK KEC -
		Q500	0TR387500AA	CHIP 2SC3875S(ALY) BK KEC -
RESISTORs				
		R10	0RH3301D622	3.3K 1/10W 5 D.R/TP
		R1001	0RH0562D622	56 1/10W 5 D.R/TP
		R1003	0RH8200D622	820 1/10W 5 D.R/TP
		R1004	0RH3000D622	300 1/10W 5 D.R/TP
		R1005	0RH0682D622	68 1/10W 5 D.R/TP
		R1010	0RH7501D622	7.5K 1/10W 5 D.R/TP
		R1012	0RH7502D622	75K 1/10W 5 D.R/TP
		R1014	0RH1000D622	100 1/10W 5 D.R/TP
		R104	0RH1000D622	100 1/10W 5 D.R/TP
		R106	0RH1500D622	150 1/10W 5 D.R/TP

DATE: 2004. 11. 20.

*S	*AL	LOC. NO.	PART NO.	DESCRIPTION / SPECIFICATION
		R107	0RH1503D622	150K 1/10W 5 D.R/TP
		R11	0RH3301D622	3.3K 1/10W 5 D.R/TP
		R1100	0RH1000D622	100 1/10W 5 D.R/TP
		R1102	0RH1000D622	100 1/10W 5 D.R/TP
		R1106	0RH1202D622	12K 1/10W 5 D.R/TP
		R1107	0RH1502D622	15K 1/10W 5 D.R/TP
		R118	0RH1000D622	100 1/10W 5 D.R/TP
		R126	0RH1502D622	15K 1/10W 5 D.R/TP
		R132	0RH1003D622	100K 1/10W 5 D.R/TP
		R133	0RH1003D622	100K 1/10W 5 D.R/TP
		R134	0RH1003D622	100K 1/10W 5 D.R/TP
		R135	0RH1003D622	100K 1/10W 5 D.R/TP
		R140	0RH0392D622	39 1/10W 5 D.R/TP
		R141	0RH0392D622	39 1/10W 5 D.R/TP
		R142	0RH0392D622	39 1/10W 5 D.R/TP
		R143	0RH0392D622	39 1/10W 5 D.R/TP
		R144	0RH0392D622	39 1/10W 5 D.R/TP
		R145	0RH0392D622	39 1/10W 5 D.R/TP
		R146	0RH0392D622	39 1/10W 5 D.R/TP
		R147	0RH0392D622	39 1/10W 5 D.R/TP
		R154	0RH0822D622	82 1/10W 5 D.R/TP
		R156	0RH0822D622	82 1/10W 5 D.R/TP
		R158	0RH0822D622	82 1/10W 5 D.R/TP
		R162	0RH2701D622	2.7K 1/10W 5 D.R/TP
		R201	0RH4703D622	470K 1/10W 5 D.R/TP
		R202	0RH9101D622	9.1K 1/10W 5 D.R/TP
		R203	0RH9101D622	9.1K 1/10W 5 D.R/TP
		R204	0RH4703D622	470K 1/10W 5 D.R/TP
		R223	0RH2702D622	27K 1/10W 5 D.R/TP
		R232	0RH1000D622	100 1/10W 5 D.R/TP
		R233	0RH1000D622	100 1/10W 5 D.R/TP
		R24	0RH1000D622	100 1/10W 5 D.R/TP
		R25	0RH1000D622	100 1/10W 5 D.R/TP
		R266	0RH4701D622	4.7K 1/10W 5 D.R/TP
		R267	0RH4702D622	47K 1/10W 5 D.R/TP
		R268	0RH4701D622	4.7K 1/10W 5 D.R/TP
		R312	0RH4700D622	470 1/10W 5 D.R/TP
		R313	0RH1500D622	150 1/10W 5 D.R/TP
		R314	0RH4700D622	470 1/10W 5 D.R/TP
		R315	0RH1500D622	150 1/10W 5 D.R/TP
		R322	0RH1500D622	150 1/10W 5 D.R/TP
		R394	0RH6800D622	680 OHM 1 / 10 W 5% D R/TP
		R395	0RH6800D622	680 OHM 1 / 10 W 5% D R/TP
		R44	0RH1000D622	100 1/10W 5 D.R/TP
		R45	0RH1000D622	100 1/10W 5 D.R/TP
		R502	0RH3301D622	3.3K 1/10W 5 D.R/TP
		R520	0RH1800D622	180 1/10W 5 D.R/TP
		R527	0RH4701D622	4.7K 1/10W 5 D.R/TP
		R607	0RH1000D622	100 1/10W 5 D.R/TP
		R610	0RH2701D622	2.7K 1/10W 5 D.R/TP
		R703	0RH4701D622	4.7K 1/10W 5 D.R/TP
		R705	0RH4701D622	4.7K 1/10W 5 D.R/TP
		R712	0RH0752D622	75 1/10W 5 D.R/TP
		R713	0RH0752D622	75 1/10W 5 D.R/TP
		R715	0RH1202D622	12K 1/10W 5 D.R/TP
		R716	0RH0752D622	75 1/10W 5 D.R/TP
		R719	0RH1502D622	15K 1/10W 5 D.R/TP
		R725	0RH1000D622	100 1/10W 5 D.R/TP
		R729	0RH1000D622	100 1/10W 5 D.R/TP
		R730	0RH1000D622	100 1/10W 5 D.R/TP
		R737	0RH4701D622	4.7K 1/10W 5 D.R/TP
		R738	0RH4701D622	4.7K 1/10W 5 D.R/TP

DATE: 2004. 11. 20.

*S	*AL	LOC. NO.	PART NO.	DESCRIPTION / SPECIFICATION
		R755	0RH0102D622	10 1/10W 5 D.R/TP
		R756	0RH0102D622	10 1/10W 5 D.R/TP
		R802	0RH8200D622	820 1/10W 5 D.R/TP
		R805	0RH0752D622	75 1/10W 5 D.R/TP
		R806	0RH4700D622	470 1/10W 5 D.R/TP
		R809	0RH0102D622	10 1/10W 5 D.R/TP
		R83	0RH1000D622	100 1/10W 5 D.R/TP
		R85	0RH1000D622	100 1/10W 5 D.R/TP
		R850	0RH4701D622	4.7K 1/10W 5 D.R/TP
		R851	0RH4701D622	4.7K 1/10W 5 D.R/TP
		R87	0RH1000D622	100 1/10W 5 D.R/TP
		R89	0RH1000D622	100 1/10W 5 D.R/TP
		R930	0RH3301D622	3.3K 1/10W 5 D.R/TP
		R931	0RH3301D622	3.3K 1/10W 5 D.R/TP
		R941	0RH1000D622	100 1/10W 5 D.R/TP
		R960	0RH1000D622	100 1/10W 5 D.R/TP
		R973	0RH1202D622	12K 1/10W 5 D.R/TP
		R976	0RH4701D622	4.7K 1/10W 5 D.R/TP
		RA600	0RRZVTA001A	MNR-14-E0A-J-101 R OHM 100
		RA601	0RRZVTA001A	MNR-14-E0A-J-101 R OHM 100
		RA602	0RRZVTA001A	MNR-14-E0A-J-101 R OHM 100
		RA603	0RRZVTA001A	MNR-14-E0A-J-101 R OHM 100
		RA604	0RRZVTA001A	MNR-14-E0A-J-101 R OHM 100
		RA605	0RRZVTA001A	MNR-14-E0A-J-101 R OHM 100
		L303	0RH0000D622	0 OHM 1 / 10 W 2012 5.00% D
		R1002	0RH1501D622	1.5K OHM 1 / 10 W 2012 5.00%
		R1011	0RH0000D622	0 OHM 1 / 10 W 2012 5.00% D
		R1013	0RH0000D622	0 OHM 1 / 10 W 2012 5.00% D
		R1015	0RH0000D622	0 OHM 1 / 10 W 2012 5.00% D
		R1026	0RH0000D622	0 OHM 1 / 10 W 2012 5.00% D
		R1105	0RH1001D622	1K OHM 1 / 10 W 2012 5.00% D
		R1116	0RH0000D622	0 OHM 1 / 10 W 2012 5.00% D
		R128	0RH1002D622	10K OHM 1 / 10 W 2012 5.00%
		R129	0RH1002D622	10K OHM 1 / 10 W 2012 5.00%
		R1301	0RH1002D622	10K OHM 1 / 10 W 2012 5.00%
		R1304	0RH1002D622	10K OHM 1 / 10 W 2012 5.00%
		R1350	0RH0000D622	0 OHM 1 / 10 W 2012 5.00% D
		R22	0RH0000D622	0 OHM 1 / 10 W 2012 5.00% D
		R226	0RH1002D622	10K OHM 1 / 10 W 2012 5.00%
		R227	0RH1002D622	10K OHM 1 / 10 W 2012 5.00%
		R229	0RH1002D622	10K OHM 1 / 10 W 2012 5.00%
		R230	0RH1002D622	10K OHM 1 / 10 W 2012 5.00%
		R264	0RH1001D622	1K OHM 1 / 10 W 2012 5.00% D
		R265	0RH1001D622	1K OHM 1 / 10 W 2012 5.00% D
		R271	0RH0000D622	0 OHM 1 / 10 W 2012 5.00% D
		R273	0RH0000D622	0 OHM 1 / 10 W 2012 5.00% D
		R300	0RH1002D622	10K OHM 1 / 10 W 2012 5.00%
		R301	0RH1002D622	10K OHM 1 / 10 W 2012 5.00%
		R302	0RH1002D622	10K OHM 1 / 10 W 2012 5.00%
		R304	0RH1002D622	10K OHM 1 / 10 W 2012 5.00%
		R305	0RH1002D622	10K OHM 1 / 10 W 2012 5.00%
		R306	0RH1002D622	10K OHM 1 / 10 W 2012 5.00%
		R307	0RH1002D622	10K OHM 1 / 10 W 2012 5.00%
		R308	0RH1002D622	10K OHM 1 / 10 W 2012 5.00%
		R309	0RH1002D622	10K OHM 1 / 10 W 2012 5.00%
		R338	0RH1002D622	10K OHM 1 / 10 W 2012 5.00%
		R339	0RH1002D622	10K OHM 1 / 10 W 2012 5.00%
		R342	0RH1002D622	10K OHM 1 / 10 W 2012 5.00%
		R343	0RH1002D622	10K OHM 1 / 10 W 2012 5.00%
		R348	0RH1002D622	10K OHM 1 / 10 W 2012 5.00%
		R349	0RH1002D622	10K OHM 1 / 10 W 2012 5.00%
		R352	0RH1002D622	10K OHM 1 / 10 W 2012 5.00%

DATE: 2004. 11. 20.

*S	*AL	LOC. NO.	PART NO.	DESCRIPTION / SPECIFICATION
		R353	0RH1002D622	10K OHM 1 / 10 W 2012 5.00%
		R354	0RH1002D622	10K OHM 1 / 10 W 2012 5.00%
		R355	0RH1002D622	10K OHM 1 / 10 W 2012 5.00%
		R363	0RH1001D622	1K OHM 1 / 10 W 2012 5.00% D
		R367	0RH1001D622	1K OHM 1 / 10 W 2012 5.00% D
		R373	0RH1001D622	1K OHM 1 / 10 W 2012 5.00% D
		R377	0RH1001D622	1K OHM 1 / 10 W 2012 5.00% D
		R379	0RH1001D622	1K OHM 1 / 10 W 2012 5.00% D
		R381	0RH1001D622	1K OHM 1 / 10 W 2012 5.00% D
		R383	0RH1001D622	1K OHM 1 / 10 W 2012 5.00% D
		R46	0RH1001D622	1K OHM 1 / 10 W 2012 5.00% D
		R5006	0RH0000D622	0 OHM 1 / 10 W 2012 5.00% D
		R5008	0RH0000D622	0 OHM 1 / 10 W 2012 5.00% D
		R5014	0RH1002D622	10K OHM 1 / 10 W 2012 5.00%
		R505	0RH0000D622	0 OHM 1 / 10 W 2012 5.00% D
		R506	0RH0000D622	0 OHM 1 / 10 W 2012 5.00% D
		R516	0RH0222D622	22 OHM 1 / 10 W 2012 5.00% D
		R517	0RH0222D622	22 OHM 1 / 10 W 2012 5.00% D
		R519	0RH0222D622	22 OHM 1 / 10 W 2012 5.00% D
		R530	0RH0000D622	0 OHM 1 / 10 W 2012 5.00% D
		R532	0RH0222D622	22 OHM 1 / 10 W 2012 5.00% D
		R700	0RH0000D622	0 OHM 1 / 10 W 2012 5.00% D
		R726	0RH0000D622	0 OHM 1 / 10 W 2012 5.00% D
		R732	0RH1001D622	1K OHM 1 / 10 W 2012 5.00% D
		R752	0RH0000D622	0 OHM 1 / 10 W 2012 5.00% D
		R753	0RH0000D622	0 OHM 1 / 10 W 2012 5.00% D
		R760	0RH0000D622	0 OHM 1 / 10 W 2012 5.00% D
		R761	0RH0000D622	0 OHM 1 / 10 W 2012 5.00% D
		R803	0RH0000D622	0 OHM 1 / 10 W 2012 5.00% D
		R854	0RH0000D622	0 OHM 1 / 10 W 2012 5.00% D
		R963	0RH1002D622	10K OHM 1 / 10 W 2012 5.00%
		R964	0RH0000D622	0 OHM 1 / 10 W 2012 5.00% D
		R979	0RH0000D622	0 OHM 1 / 10 W 2012 5.00% D
		R980	0RH0000D622	0 OHM 1 / 10 W 2012 5.00% D
		R983	0RH1002D622	10K OHM 1 / 10 W 2012 5.00%
		R998	0RH0000D622	0 OHM 1 / 10 W 2012 5.00% D
		R100	0RJ1000D677	100 OHM 1/10 W 5% 1608 R/TP
		R101	0RJ1000D677	100 OHM 1/10 W 5% 1608 R/TP
		R102	0RJ1000D677	100 OHM 1/10 W 5% 1608 R/TP
		R1027	0RJ1202D677	12K OHM 1/10 W 5% 1608 R/TP
		R1028	0RJ2200D677	220 OHM 1/10 W 5% 1608 R/TP
		R103	0RJ1000D677	100 OHM 1/10 W 5% 1608 R/TP
		R105	0RJ1000D677	100 OHM 1/10 W 5% 1608 R/TP
		R108	0RJ1000D677	100 OHM 1/10 W 5% 1608 R/TP
		R109	0RJ1000D677	100 OHM 1/10 W 5% 1608 R/TP
		R110	0RJ1000D677	100 OHM 1/10 W 5% 1608 R/TP
		R111	0RJ1000D677	100 OHM 1/10 W 5% 1608 R/TP
		R1110	0RJ0000D677	0 OHM 1/10 W 5% 1608 R/TP
		R112	0RJ1000D677	100 OHM 1/10 W 5% 1608 R/TP
		R113	0RJ1000D677	100 OHM 1/10 W 5% 1608 R/TP
		R114	0RJ1000D677	100 OHM 1/10 W 5% 1608 R/TP
		R115	0RJ1000D677	100 OHM 1/10 W 5% 1608 R/TP
		R116	0RJ1000D677	100 OHM 1/10 W 5% 1608 R/TP
		R117	0RJ1000D677	100 OHM 1/10 W 5% 1608 R/TP
		R120	0RJ1000D677	100 OHM 1/10 W 5% 1608 R/TP
		R121	0RJ0000D677	0 OHM 1/10 W 5% 1608 R/TP
		R122	0RJ1000D677	100 OHM 1/10 W 5% 1608 R/TP
		R123	0RJ2202D677	22K OHM 1/10 W 5% 1608 R/TP
		R124	0RJ1500D677	150 OHM 1/10 W 5% 1608 R/TP
		R125	0RJ4701D677	4.7K OHM 1/10 W 5% 1608 R/TP
		R127	0RJ3301D677	3.3K OHM 1/10 W 5% 1608 R/TP
		R130	0RJ6801D477	6.8K OHM 1/10 W 1% 1608 R/TP

DATE: 2004. 11. 20.

*S	*AL	LOC. NO.	PART NO.	DESCRIPTION / SPECIFICATION
		R1300	0RJ6801D477	6.8K OHM 1/10 W 1% 1608 R/TP
		R1302	0RJ2202D477	22K OHM 1/10 W 1% 1608 R/TP
		R1303	0RJ6801D477	6.8K OHM 1/10 W 1% 1608 R/TP
		R1305	0RJ2202D477	22K OHM 1/10 W 1% 1608 R/TP
		R131	0RJ6801D477	6.8K OHM 1/10 W 1% 1608 R/TP
		R136	0RJ8202D677	82K OHM 1/10 W 5% 1608 R/TP
		R137	0RJ8202D677	82K OHM 1/10 W 5% 1608 R/TP
		R138	0RJ1002D677	10K OHM 1/10 W 5% 1608 R/TP
		R139	0RJ1002D677	10K OHM 1/10 W 5% 1608 R/TP
		R15	0RJ4700D677	470 OHM 1/10 W 5% 1608 R/TP
		R152	0RJ0000D677	0 OHM 1/10 W 5% 1608 R/TP
		R153	0RJ0000D677	0 OHM 1/10 W 5% 1608 R/TP
		R155	0RJ2700D677	270 OHM 1/10 W 5% 1608 R/TP
		R157	0RJ2700D677	270 OHM 1/10 W 5% 1608 R/TP
		R159	0RJ2700D677	270 OHM 1/10 W 5% 1608 R/TP
		R16	0RJ1002D677	10K OHM 1/10 W 5% 1608 R/TP
		R160	0RJ1500D677	150 OHM 1/10 W 5% 1608 R/TP
		R161	0RJ0222D677	22 OHM 1/10 W 5% 1608 R/TP
		R163	0RJ1500D677	150 OHM 1/10 W 5% 1608 R/TP
		R164	0RJ1500D677	150 OHM 1/10 W 5% 1608 R/TP
		R17	0RJ2202D677	22K OHM 1/10 W 5% 1608 R/TP
		R173	0RJ3301D677	3.3K OHM 1/10 W 5% 1608 R/TP
		R175	0RJ3301D677	3.3K OHM 1/10 W 5% 1608 R/TP
		R18	0RJ0000D677	0 OHM 1/10 W 5% 1608 R/TP
		R206	0RJ0222D677	22 OHM 1/10 W 5% 1608 R/TP
		R207	0RJ0752D677	75 OHM 1/10 W 5% 1608 R/TP
		R210	0RJ3902D677	39K OHM 1/10 W 5% 1608 R/TP
		R211	0RJ5102D677	51K OHM 1/10 W 5% 1608 R/TP
		R212	0RJ4703D677	470K OHM 1/10 W 5% 1608 R/TP
		R213	0RJ0000D677	0 OHM 1/10 W 5% 1608 R/TP
		R214	0RJ0000D677	0 OHM 1/10 W 5% 1608 R/TP
		R215	0RJ4703D677	470K OHM 1/10 W 5% 1608 R/TP
		R222	0RJ1001D677	1K OHM 1/10 W 5% 1608 R/TP
		R224	0RJ4702D677	47000 OHM 1/10 W 5% 1608 R/T
		R225	0RJ1001D677	1K OHM 1/10 W 5% 1608 R/TP
		R228	0RJ1001D677	1K OHM 1/10 W 5% 1608 R/TP
		R231	0RJ1000D677	100 OHM 1/10 W 5% 1608 R/TP
		R234	0RJ0222D677	22 OHM 1/10 W 5% 1608 R/TP
		R239	0RJ0752D677	75 OHM 1/10 W 5% 1608 R/TP
		R242	0RJ1000D677	100 OHM 1/10 W 5% 1608 R/TP
		R243	0RJ1000D677	100 OHM 1/10 W 5% 1608 R/TP
		R250	0RJ3902D677	39K OHM 1/10 W 5% 1608 R/TP
		R251	0RJ5102D677	51K OHM 1/10 W 5% 1608 R/TP
		R252	0RJ0752D677	75 OHM 1/10 W 5% 1608 R/TP
		R255	0RJ0752D677	75 OHM 1/10 W 5% 1608 R/TP
		R260	0RJ1501D677	1.5K OHM 1/10 W 5% 1608 R/TP
		R261	0RJ1501D677	1.5K OHM 1/10 W 5% 1608 R/TP
		R262	0RJ4703D677	470K OHM 1/10 W 5% 1608 R/TP
		R263	0RJ4703D677	470K OHM 1/10 W 5% 1608 R/TP
		R303	0RJ1002D677	10K OHM 1/10 W 5% 1608 R/TP
		R317	0RJ2700D677	270 OHM 1/10 W 5% 1608 R/TP
		R319	0RJ2700D677	270 OHM 1/10 W 5% 1608 R/TP
		R321	0RJ2700D677	270 OHM 1/10 W 5% 1608 R/TP
		R323	0RJ1500D677	150 OHM 1/10 W 5% 1608 R/TP
		R326	0RJ1201D677	1200 OHM 1/10 W 5% 1608 R/TP
		R329	0RJ1201D677	1200 OHM 1/10 W 5% 1608 R/TP
		R34	0RJ0000D677	0 OHM 1/10 W 5% 1608 R/TP
		R35	0RJ0000D677	0 OHM 1/10 W 5% 1608 R/TP
		R356	0RJ1002D677	10K OHM 1/10 W 5% 1608 R/TP
		R357	0RJ1002D677	10K OHM 1/10 W 5% 1608 R/TP
		R358	0RJ1002D677	10K OHM 1/10 W 5% 1608 R/TP
		R359	0RJ1002D677	10K OHM 1/10 W 5% 1608 R/TP

DATE: 2004. 11. 20.

*S	*AL	LOC. NO.	PART NO.	DESCRIPTION / SPECIFICATION
		R385	0RJ6800D677	680 OHM 1/10 W 5% 1608 R/TP
		R387	0RJ6800D677	680 OHM 1/10 W 5% 1608 R/TP
		R390	0RJ6800D677	680 OHM 1/10 W 5% 1608 R/TP
		R392	0RJ6800D677	680 OHM 1/10 W 5% 1608 R/TP
		R393	0RJ6800D677	680 OHM 1/10 W 5% 1608 R/TP
		R444	0RJ0000D677	0 OHM 1/10 W 5% 1608 R/TP
		R445	0RJ0000D677	0 OHM 1/10 W 5% 1608 R/TP
		R447	0RJ0000D677	0 OHM 1/10 W 5% 1608 R/TP
		R448	0RJ0000D677	0 OHM 1/10 W 5% 1608 R/TP
		R47	0RJ0000D677	0 OHM 1/10 W 5% 1608 R/TP
		R48	0RJ1000D677	100 OHM 1/10 W 5% 1608 R/TP
		R50	0RJ1000D677	100 OHM 1/10 W 5% 1608 R/TP
		R500	0RJ1002D677	10K OHM 1/10 W 5% 1608 R/TP
		R5002	0RJ0000D677	0 OHM 1/10 W 5% 1608 R/TP
		R5007	0RJ0000D677	0 OHM 1/10 W 5% 1608 R/TP
		R5009	0RJ0000D677	0 OHM 1/10 W 5% 1608 R/TP
		R501	0RJ1002D677	10K OHM 1/10 W 5% 1608 R/TP
		R5013	0RJ1002D677	10K OHM 1/10 W 5% 1608 R/TP
		R5015	0RJ0000D677	0 OHM 1/10 W 5% 1608 R/TP
		R5016	0RJ0000D677	0 OHM 1/10 W 5% 1608 R/TP
		R5017	0RJ0000D677	0 OHM 1/10 W 5% 1608 R/TP
		R5019	0RJ0000D677	0 OHM 1/10 W 5% 1608 R/TP
		R5020	0RJ0000D677	0 OHM 1/10 W 5% 1608 R/TP
		R5021	0RJ0000D677	0 OHM 1/10 W 5% 1608 R/TP
		R504	0RJ1001D677	1K OHM 1/10 W 5% 1608 R/TP
		R51	0RJ1000D677	100 OHM 1/10 W 5% 1608 R/TP
		R514	0RJ0000D677	0 OHM 1/10 W 5% 1608 R/TP
		R515	0RJ4703D677	470K OHM 1/10 W 5% 1608 R/TP
		R518	0RJ0000D677	0 OHM 1/10 W 5% 1608 R/TP
		R52	0RJ1000D677	100 OHM 1/10 W 5% 1608 R/TP
		R521	0RJ0222D677	22 OHM 1/10 W 5% 1608 R/TP
		R522	0RJ0332D677	33 OHM 1/10 W 5% 1608 R/TP
		R523	0RJ0222D677	22 OHM 1/10 W 5% 1608 R/TP
		R524	0RJ0332D677	33 OHM 1/10 W 5% 1608 R/TP
		R525	0RJ0222D677	22 OHM 1/10 W 5% 1608 R/TP
		R526	0RJ0332D677	33 OHM 1/10 W 5% 1608 R/TP
		R528	0RJ0222D677	22 OHM 1/10 W 5% 1608 R/TP
		R529	0RJ0000D677	0 OHM 1/10 W 5% 1608 R/TP
		R53	0RJ1000D677	100 OHM 1/10 W 5% 1608 R/TP
		R533	0RJ0222D677	22 OHM 1/10 W 5% 1608 R/TP
		R534	0RJ0222D677	22 OHM 1/10 W 5% 1608 R/TP
		R54	0RJ1000D677	100 OHM 1/10 W 5% 1608 R/TP
		R55	0RJ1000D677	100 OHM 1/10 W 5% 1608 R/TP
		R56	0RJ1000D677	100 OHM 1/10 W 5% 1608 R/TP
		R57	0RJ1000D677	100 OHM 1/10 W 5% 1608 R/TP
		R58	0RJ1000D677	100 OHM 1/10 W 5% 1608 R/TP
		R59	0RJ1211D477	1.21K OHM 1/10 W 1% 1608 R/T
		R60	0RJ1000D677	100 OHM 1/10 W 5% 1608 R/TP
		R600	0RJ1000D677	100 OHM 1/10 W 5% 1608 R/TP
		R601	0RJ1000D677	100 OHM 1/10 W 5% 1608 R/TP
		R602	0RJ1000D677	100 OHM 1/10 W 5% 1608 R/TP
		R603	0RJ1000D677	100 OHM 1/10 W 5% 1608 R/TP
		R604	0RJ0000D677	0 OHM 1/10 W 5% 1608 R/TP
		R606	0RJ1000D677	100 OHM 1/10 W 5% 1608 R/TP
		R608	0RJ1000D677	100 OHM 1/10 W 5% 1608 R/TP
		R609	0RJ1000D677	100 OHM 1/10 W 5% 1608 R/TP
		R62	0RJ1000D677	100 OHM 1/10 W 5% 1608 R/TP
		R64	0RJ1000D677	100 OHM 1/10 W 5% 1608 R/TP
		R66	0RJ1000D677	100 OHM 1/10 W 5% 1608 R/TP
		R68	0RJ1000D677	100 OHM 1/10 W 5% 1608 R/TP
		R70	0RJ1000D677	100 OHM 1/10 W 5% 1608 R/TP
		R701	0RJ1001D677	1K OHM 1/10 W 5% 1608 R/TP

DATE: 2004. 11. 20.

*S	*AL	LOC. NO.	PART NO.	DESCRIPTION / SPECIFICATION
		R702	0RJ1001D677	1K OHM 1/10 W 5% 1608 R/TP
		R706	0RJ0000D677	0 OHM 1/10 W 5% 1608 R/TP
		R71	0RJ1000D677	100 OHM 1/10 W 5% 1608 R/TP
		R711	0RJ0222D677	22 OHM 1/10 W 5% 1608 R/TP
		R717	0RJ1000D677	100 OHM 1/10 W 5% 1608 R/TP
		R718	0RJ1000D677	100 OHM 1/10 W 5% 1608 R/TP
		R72	0RJ1000D677	100 OHM 1/10 W 5% 1608 R/TP
		R720	0RJ0222D677	22 OHM 1/10 W 5% 1608 R/TP
		R721	0RJ0222D677	22 OHM 1/10 W 5% 1608 R/TP
		R722	0RJ0222D677	22 OHM 1/10 W 5% 1608 R/TP
		R727	0RJ1000D677	100 OHM 1/10 W 5% 1608 R/TP
		R728	0RJ0000D677	0 OHM 1/10 W 5% 1608 R/TP
		R73	0RJ1000D677	100 OHM 1/10 W 5% 1608 R/TP
		R731	0RJ4701D677	4.7K OHM 1/10 W 5% 1608 R/TP
		R739	0RJ0222D677	22 OHM 1/10 W 5% 1608 R/TP
		R740	0RJ0222D677	22 OHM 1/10 W 5% 1608 R/TP
		R751	0RJ0000D677	0 OHM 1/10 W 5% 1608 R/TP
		R754	0RJ0000D677	0 OHM 1/10 W 5% 1608 R/TP
		R757	0RJ0000D677	0 OHM 1/10 W 5% 1608 R/TP
		R758	0RJ0000D677	0 OHM 1/10 W 5% 1608 R/TP
		R759	0RJ0000D677	0 OHM 1/10 W 5% 1608 R/TP
		R79	0RJ1000D677	100 OHM 1/10 W 5% 1608 R/TP
		R800	0RJ0752D677	75 OHM 1/10 W 5% 1608 R/TP
		R801	0RJ0752D677	75 OHM 1/10 W 5% 1608 R/TP
		R807	0RJ0102D677	10 OHM 1/10 W 5% 1608 R/TP
		R808	0RJ0102D677	10 OHM 1/10 W 5% 1608 R/TP
		R81	0RJ1000D677	100 OHM 1/10 W 5% 1608 R/TP
		R852	0RJ4701D677	4.7K OHM 1/10 W 5% 1608 R/TP
		R853	0RJ4701D677	4.7K OHM 1/10 W 5% 1608 R/TP
		R855	0RJ1000D677	100 OHM 1/10 W 5% 1608 R/TP
		R856	0RJ1000D677	100 OHM 1/10 W 5% 1608 R/TP
		R86	0RJ1000D677	100 OHM 1/10 W 5% 1608 R/TP
		R88	0RJ1000D677	100 OHM 1/10 W 5% 1608 R/TP
		R90	0RJ1000D677	100 OHM 1/10 W 5% 1608 R/TP
		R901	0RJ0472D677	47 OHM 1/10 W 5% 1608 R/TP
		R902	0RJ0472D677	47 OHM 1/10 W 5% 1608 R/TP
		R904	0RJ0472D677	47 OHM 1/10 W 5% 1608 R/TP
		R906	0RJ0472D677	47 OHM 1/10 W 5% 1608 R/TP
		R908	0RJ0822D677	82 OHM 1/10 W 5% 1608 R/TP
		R909	0RJ0822D677	82 OHM 1/10 W 5% 1608 R/TP
		R910	0RJ0822D677	82 OHM 1/10 W 5% 1608 R/TP
		R913	0RJ1000D677	100 OHM 1/10 W 5% 1608 R/TP
		R914	0RJ1000D677	100 OHM 1/10 W 5% 1608 R/TP
		R915	0RJ1000D677	100 OHM 1/10 W 5% 1608 R/TP
		R916	0RJ1000D677	100 OHM 1/10 W 5% 1608 R/TP
		R917	0RJ1000D677	100 OHM 1/10 W 5% 1608 R/TP
		R918	0RJ1000D677	100 OHM 1/10 W 5% 1608 R/TP
		R919	0RJ1000D677	100 OHM 1/10 W 5% 1608 R/TP
		R92	0RJ1000D677	100 OHM 1/10 W 5% 1608 R/TP
		R920	0RJ4990D477	499 OHM 1/10 W 1% 1608 R/TP
		R921	0RJ4990D477	499 OHM 1/10 W 1% 1608 R/TP
		R923	0RJ0222D677	22 OHM 1/10 W 5% 1608 R/TP
		R924	0RJ0222D677	22 OHM 1/10 W 5% 1608 R/TP
		R925	0RJ0222D677	22 OHM 1/10 W 5% 1608 R/TP
		R926	0RJ0222D677	22 OHM 1/10 W 5% 1608 R/TP
		R927	0RJ1000D677	100 OHM 1/10 W 5% 1608 R/TP
		R928	0RJ1000D677	100 OHM 1/10 W 5% 1608 R/TP
		R929	0RJ1000D677	100 OHM 1/10 W 5% 1608 R/TP
		R93	0RJ1000D677	100 OHM 1/10 W 5% 1608 R/TP
		R933	0RJ1000D677	100 OHM 1/10 W 5% 1608 R/TP
		R934	0RJ1000D677	100 OHM 1/10 W 5% 1608 R/TP
		R935	0RJ1000D677	100 OHM 1/10 W 5% 1608 R/TP

DATE: 2004. 11. 20.

*S	*AL	LOC. NO.	PART NO.	DESCRIPTION / SPECIFICATION
		R936	0RJ1000D677	100 OHM 1/10 W 5% 1608 R/TP
		R937	0RJ1000D677	100 OHM 1/10 W 5% 1608 R/TP
		R938	0RJ1000D677	100 OHM 1/10 W 5% 1608 R/TP
		R939	0RJ1000D677	100 OHM 1/10 W 5% 1608 R/TP
		R94	0RJ1000D677	100 OHM 1/10 W 5% 1608 R/TP
		R940	0RJ1000D677	100 OHM 1/10 W 5% 1608 R/TP
		R942	0RJ1000D677	100 OHM 1/10 W 5% 1608 R/TP
		R943	0RJ1000D677	100 OHM 1/10 W 5% 1608 R/TP
		R944	0RJ1000D677	100 OHM 1/10 W 5% 1608 R/TP
		R945	0RJ0222D677	22 OHM 1/10 W 5% 1608 R/TP
		R946	0RJ0222D677	22 OHM 1/10 W 5% 1608 R/TP
		R947	0RJ1000D677	100 OHM 1/10 W 5% 1608 R/TP
		R948	0RJ1000D677	100 OHM 1/10 W 5% 1608 R/TP
		R949	0RJ1000D677	100 OHM 1/10 W 5% 1608 R/TP
		R95	0RJ1000D677	100 OHM 1/10 W 5% 1608 R/TP
		R950	0RJ1000D677	100 OHM 1/10 W 5% 1608 R/TP
		R952	0RJ1002D677	10K OHM 1/10 W 5% 1608 R/TP
		R953	0RJ1002D677	10K OHM 1/10 W 5% 1608 R/TP
		R96	0RJ1000D677	100 OHM 1/10 W 5% 1608 R/TP
		R965	0RJ0222D677	22 OHM 1/10 W 5% 1608 R/TP
		R966	0RJ0222D677	22 OHM 1/10 W 5% 1608 R/TP
		R967	0RJ0222D677	22 OHM 1/10 W 5% 1608 R/TP
		R968	0RJ0222D677	22 OHM 1/10 W 5% 1608 R/TP
		R972	0RJ1000D677	100 OHM 1/10 W 5% 1608 R/TP
		R975	0RJ1000D677	100 OHM 1/10 W 5% 1608 R/TP
		R98	0RJ1000D677	100 OHM 1/10 W 5% 1608 R/TP
		R981	0RJ0000D677	0 OHM 1/10 W 5% 1608 R/TP
		R982	0RJ6801D477	6.8K OHM 1/10 W 1% 1608 R/TP
		R984	0RJ2202D477	22K OHM 1/10 W 1% 1608 R/TP
		R99	0RJ1000D677	100 OHM 1/10 W 5% 1608 R/TP
		OTHERs		
		Z1000	6200QL3002F	"X6966M EPCOS ST SIP5K, 6200Q"
		X11	6202VDT002E	SX-1SMD SUNNY RADIAL 2025000
		X500	6202VDT002J	SX-1 SUNNY 13.500000MHZ +/-
		X900	6202VDT002B	SX-1 SUNNY SC14.3MHZ +/- 30
		IC900	6620F00017A	CCSD-32T-SM WOOYOUNG 32P PLC
		TU1000	6700VS0003D	TAEW-G052P LGIT MULTI VS RCA
		IR BOARD		
		C1500	0CN1040K949	0.1M 50V Z F TA52
		L1500	0LA0102K119	10UH K 2.3*3.4 TP
		IR1500	6726TV0001A	TSOP4838SO1 VISHAY 38.0KHZ H
		CONTROL BOARD		
		L1700	0LA0102K119	10UH K 2.3*3.4 TP
		R1700	0RN8200F409	820 1/6W 1% TA52
		R1701	0RN6200F409	620 1/6W 1% TA52
		R1702	0RN5100F409	510 1/6W 1 TA52
		R1703	0RN4300F409	430 OHM 1/6 W 1.00% TA52
		R1704	0RN3300F409	330 1/6W 1% TA52
		R1705	0RN2700F409	270 1/6W 1% TA52
		R1706	0RN2701F409	2.7K OHM 1/6 W 1.00% TA52
		SW1700	140-313A	TACT 2LEAD 100G(TA) LG C&D N
		SW1701	140-313A	TACT 2LEAD 100G(TA) LG C&D N
		SW1702	140-313A	TACT 2LEAD 100G(TA) LG C&D N
		SW1703	140-313A	TACT 2LEAD 100G(TA) LG C&D N
		SW1704	140-313A	TACT 2LEAD 100G(TA) LG C&D N
		SW1705	140-313A	TACT 2LEAD 100G(TA) LG C&D N

DATE: 2004. 11. 20.

*S	*AL	LOC. NO.	PART NO.	DESCRIPTION / SPECIFICATION
		SW1706	140-313A	TACT 2LEAD 100G(TA) LG C&D N
		LED P/SW BOARD		
		C1600	0CN1040K949	0.1M 50V Z F TA52
		L1600	0LA0102K119	10UH K 2.3*3.4 TP
		Q1601	0TR319809AA	KTC3198-Y(KTC1815) TP KEC TO
		Q1602	0TR319809AA	KTC3198-Y(KTC1815) TP KEC TO
		Q1603	0TR319809AA	KTC3198-Y(KTC1815) TP KEC TO
		R1600	0RD3301Q609	3.30K 1/4W(3 5% TA52
		R1601	0RD2701Q609	2.70K 1/4W(3 5% TA52
		R1602	0RD2700Q609	270 1/4W(3 5% TA52
		R1603	0RD1001Q609	1K 1/4W(3 5% TA52
		R1604	0RD1001Q609	1K 1/4W(3 5% TA52
		R1605	0RD1001Q609	1K 1/4W(3 5% TA52
		R1606	0RD1500Q609	150 1/4W(3 5% TA52
		SW1600	140-313A	TACT 2LEAD 100G(TA) LG C&D N
		LED1600	0DLBE0128AA	BRIGHT LED ELECTRONICS BL-BU
		VIDEO BOARD		
		C2007	0CH5471K416	470PF 50V 5% NP0 2012 R/TP
		C2008	0CH5471K416	470PF 50V 5% NP0 2012 R/TP
		C2020	0CK105DK94A	"1UF 2012 50V 80%,-20% R/TP F"
		C2021	0CK105DK94A	"1UF 2012 50V 80%,-20% R/TP F"
		L2022	6210TCE001A	HB-1S2012-080JT CERATEC 2012
		L2023	6210TCE001A	HB-1S2012-080JT CERATEC 2012
		R2005	0RH0752D622	75 1/10W 5 D.R/TP
		R2008	0RH0752D622	75 1/10W 5 D.R/TP
		R2012	0RH0752D622	75 1/10W 5 D.R/TP
		R2014	0RH4703D622	470K 1/10W 5 D.R/TP
		R2017	0RH4703D622	470K 1/10W 5 D.R/TP
		R2018	0RJ1000H680	100 OHM 1/2 W 5% 5025 R/TP
		R2019	0RJ1000H680	100 OHM 1/2 W 5% 5025 R/TP
		R2020	0RJ1000H680	100 OHM 1/2 W 5% 5025 R/TP
		R2021	0RJ1000H680	100 OHM 1/2 W 5% 5025 R/TP

ML041A 001.SHT 2004.03.09

FOR TUNER. LEVEL SHIFTING

VCTI VOLTAGE REGULATOR

TUNER (SAW FILTER)

IC1 VCT49xyI

BS TUNER

SIDE_AV

VIDEO OUT BUFFER

DC-DC CONVERTER

AUDIO AMP

FOR FL12300

FOR VISUAL_I2C

FOR DEBUGGING. ROM EMULATOR

SC2 SCART_JACK

SC1 SCART_JACK

JA205A/B (COMP)COMP_LR

CAUTION!!! <PCB LAYOUT>

P/No.: 3854TN1001B
2004. 03.27

ML041A 002.SHT 2004.03.09

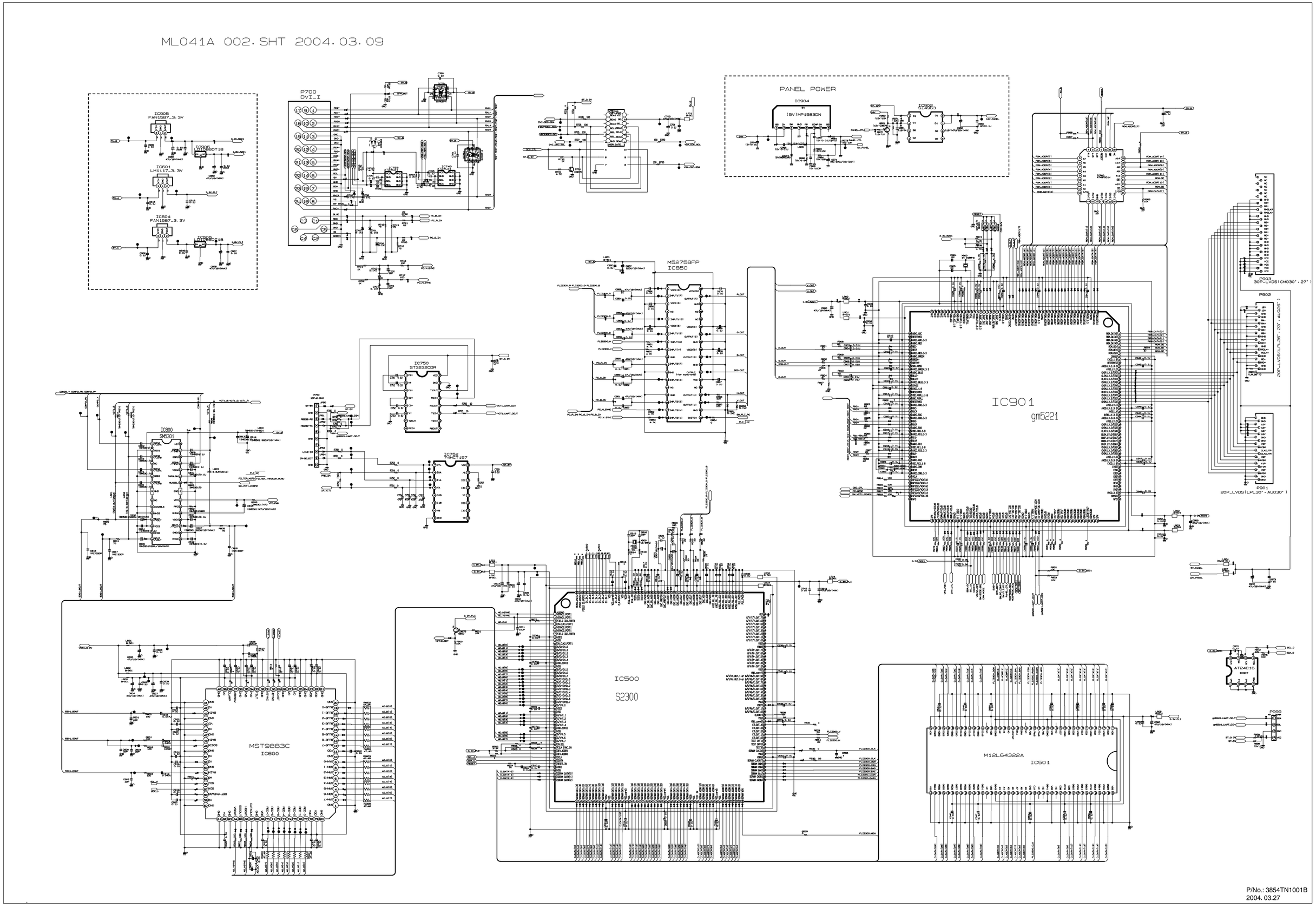

P/No.: 3854TN1001B
2004. 03.27

Nov., 2004
P/NO : 3828TSL108R
Printed in Korea